Standard of Electronic Industries Association of Japan

# EIAJ ED-7304-2

# Measuring Method for Package Dimensions of Small Outline J-leaded Package (SOJ)

Established in April, 1998

Prepared by

Technical Standardization Committee on Semiconductor Device Package

Published by

Electronic Industries Association of Japan

5-13, Nishi-shinbashi 1-chome, Minato-ku, Tokyo 105-0003, Japan

Printed in Japan

Standard of Electronic Industries Association of Japan

# Measuring Method for Package Dimensions of Small Outline-J-leaded Package (SOJ)

## 1. Scope

This standard stipulates a method for measuring dimensions specified in the design guide of BGA which classified into Form B (ref. EIAJ ED-7300).

## 2. Definition of terms

The main terms used in this standard are as defined below and new terms are defined in the text.

| | |
|---|---|
| (1) EIAJ ED-7300 | Basic standard for preparation of general dimensions rules of semiconductor device packages |
| (2) EIAJ ED-7406A | General Rules for the Preparation of Outline Drawings of Integrated Circuits Small Outline-J-lead Packages |
| (3) JIS Z 8310 | General rules of drawing |
| (4) JIS B 0021 | Illustrating method of geometrical tolerance |
| (5) JIS B 0061 | Definition and display of geometrical tolerance |
| (6) ANSI Y14.5M | Dimensioning and tolerancing |

## 3. History

External dimensions of packages for semiconductor devises are specified in the design guide and the individual standard. However, the specified external dimensions have been measured in a variety of methods by companies. As a result, measured results are so different that some trouble has occurred between semiconductor manufactures and users. Further, there are some dimensions specified in the design guide that are very difficult to measure. This standard is set up to make the definitions specified in the dimensions clear and to standardize the measuring method of them.

## 4. Definition of measuring method

The measuring method in this standard is defined for dimension values guaranteed to users on the basis of the following items.

(1) In general, measuring the dimensions shall be made with the semiconductor packages mounted on printed circuit board as the guarantee is made to user.

(2) In general, measurement may be made either by hand or automatically.

(3) If a specified dimension was difficult to measuring, the best alternative measuring method is defined as the formal measuring method.

(4) Even if a measuring method deviates out of the original definition of dimensions, it is defined as an alternative measuring method along as it is equivalent in view of accuracy and can be used easily.

(5) The dimensions that cannot be measured unless the package is destroyed may be calculated from other dimensions or alternated by representative values.

## 5. Reference characters and drawings

Figure 1

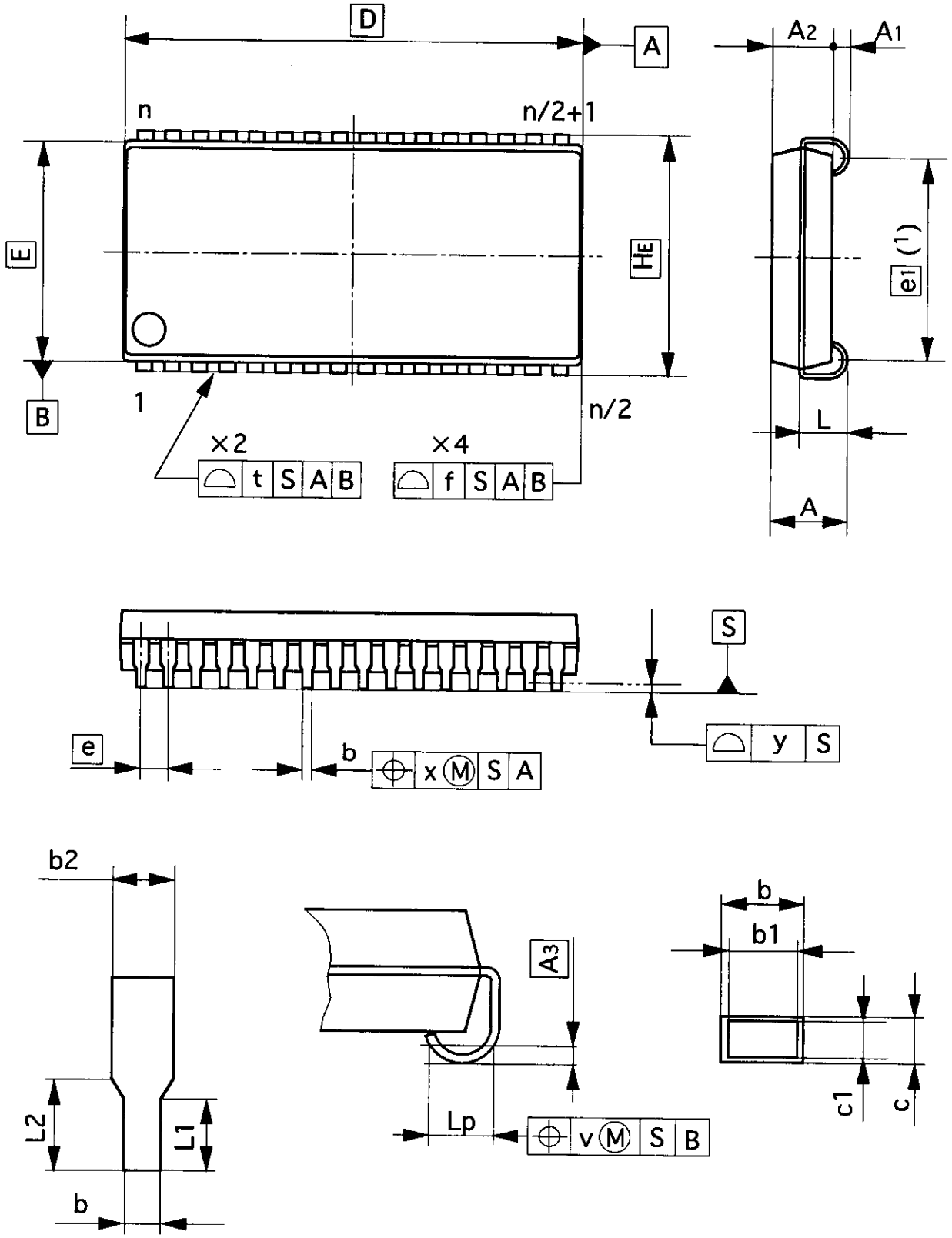


(1) Distance between the center of soldered portion length Lp is denoted as spacing between terminal rows $e_1$.

# 6. Measuring method

## 6.1 Profile of terminal edge

(1) Definition

The position of the lead tips should be located within the range t centering on the position which is at a theoretically correct distance of HE/2 from the datum line B.

Figure 2

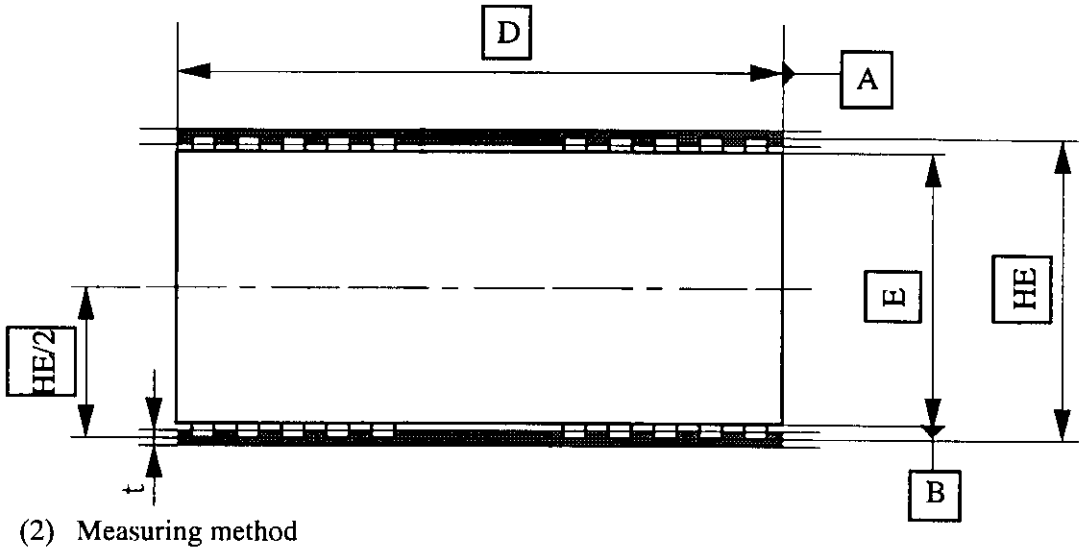


(2) Measuring method

(a) Put the package on the surface plate.

(b) Make the datum A and B coincide with the measuring reference.

(c) Find the logically precise distances HE/2 from the datum B. Then, check if the tip of every lead on each package side is within the tolerance t (range) specified as the center.

## 6.2 Profile of Package end face

(1) Definition

As to the package width and package length, the package end face should be located within the range f centering on the position which is at a theoretically correct distance of E/2 or D/2 from the datum A and B. Except mold protrusion and gate remaining.

Figure 3

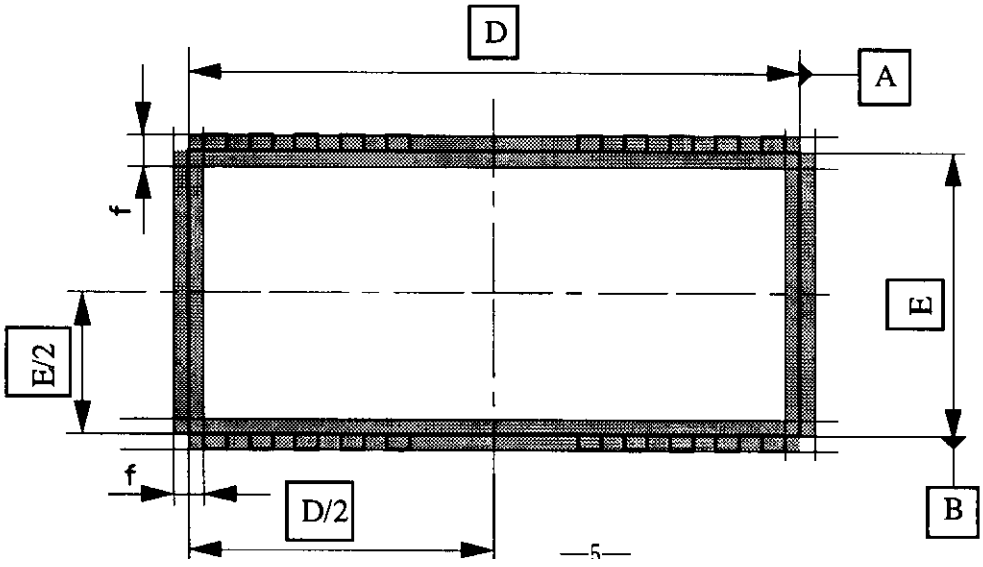

(2) Measuring method

(a) Put the package on the surface plate.

(b) Make the datum A and B coincide with the measuring reference.

(c) Find the logically precise distances D/2 and E/2 from the datum A and B.Then, check if the package end faces are within the tolerance f (range) specified as the center.

## 6.3 Mounting height A

(1) Definition

Let the height of a package from the seating plane to the top of the package be denoted as the mounting height A. The mounting therefore includes inclination and warping of the package.

Figure 4

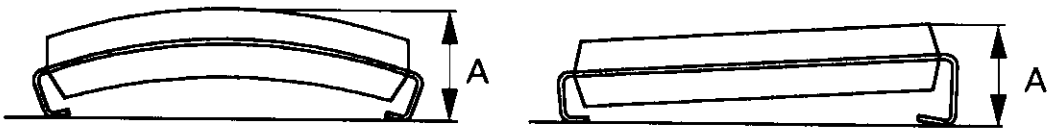


(2) Measuring method

(a) Put the package on the surface plate.

(b) From the side or top, measure the distance from the reference surface (surface plate) to the highest point. Let the distance be denoted as the mounting height A.

## 6.4 Stand-off A1

(1) Definition

Let the height of a package from the seating plane to the lowest point of the package be denoted as the stand-off A1.

Figure 5

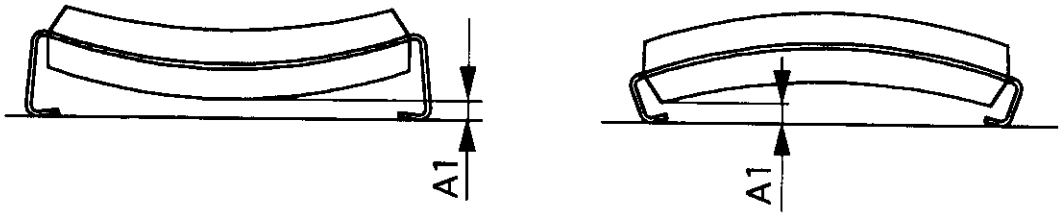


(2) Measuring method

(a) Put the package on the surface plate.

(b) Measure the distance from the reference surface (surface plate) to the lowest point. Let the distance be denoted as the stand-off A1.

## 6.5 Body thickness A2

(1) Definition

The body thickness is defined as a distance between parallel planes, tangent to the highest point and the lowest point of the body. Let the distance be denoted as the body thickness A2

Figure 6

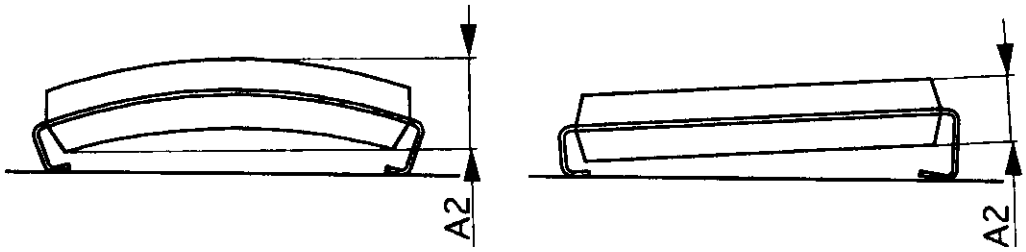


(2) Measuring method

(a) Put the package between vertically parallel surface plates. Never touch the leads.

(b) Measure the total thickness including the surface plates and subtract the thickness of surface plates from the total thickness so as to obtain the body thickness A2 of the package.

(3) Quick measuring method

Put the vernier caliper on each of the diagonal lines (two directions) of the package. Let the maximum value be denoted as the body thickness A2.

## 6.6 Lead width b, b1 and b2, lead thickness c and c1

(1) Definition

(a) The outmost width b in the range of gage height A3 from seating plane. The outmost with before surface plating shall be defined as b1.

(b) The outmost width shall be defined as b2 except the range of L2 and dumber remaining.

(c) The outmost thickness in the range of gage height A3 from seating plane. The outmost thickness before surface plating shall be defined as C1. The lead width and lead thickness, as shown in the following figure, include burrs, crushing, and sagging.

Figure 7

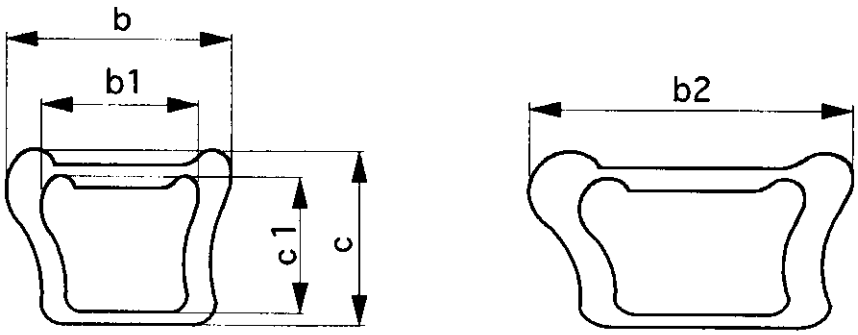

Figure 8

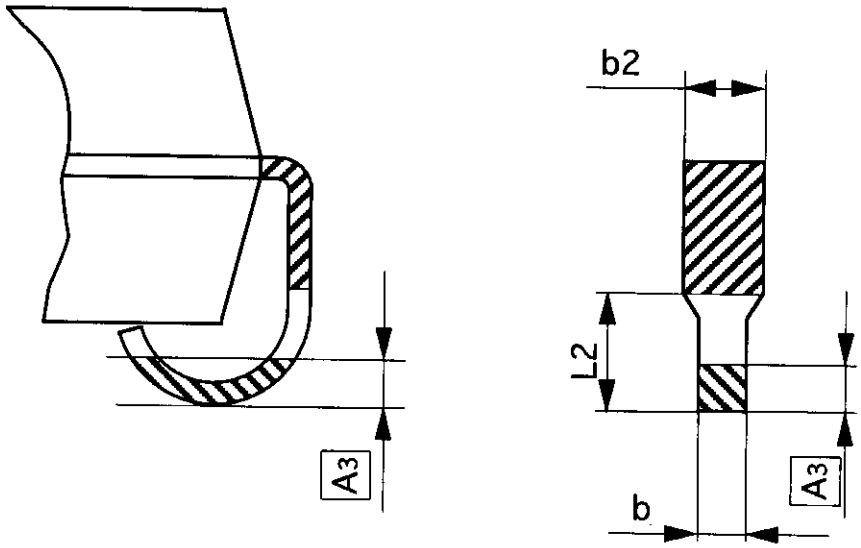


(2) Measuring method

(a) Put the package on the surface plate.

(b) Make the datum parallel with the measuring reference.

(c) Measure the lead width and thickness in the specified area.

(3) Remarks

(a) b1 and c1 may be measured before the lead is processed. If this in the case, measure b1 and c1 at the position within the above specified range after processing.

(b) The lead thickness may be measured at 4 points on the 4 corners of the package as representative values.

## 6.7 Soldered portion length Lp

(1) Definition

The distance between point a and point b which are crossing points of outer surface of lead and gage plane A3.

Figure 9

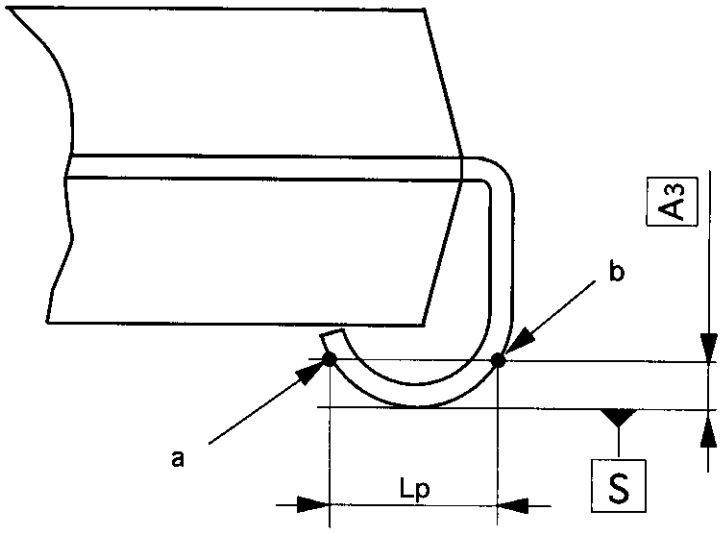

(2) Measuring method

(a) Put the package on the surface plate.

(b) Make the datum parallel with the measuring reference.

(c) Observe the lead toward the package side(in the seating plane direction).Measure the distance of a and b.

(3) Remarks

This measuring method can be done only from the side. Therefore, the values of the leads observable from the side are allowed as representative values.

## 6.8 The allowable value of the center of the soldered portion length Lp (V)

(1) Definition

The center of the soldered portion length Lp should be located within the range v centering on the position that is at a theoretically correct distance of e1/2 from the datum B.

Figure 10

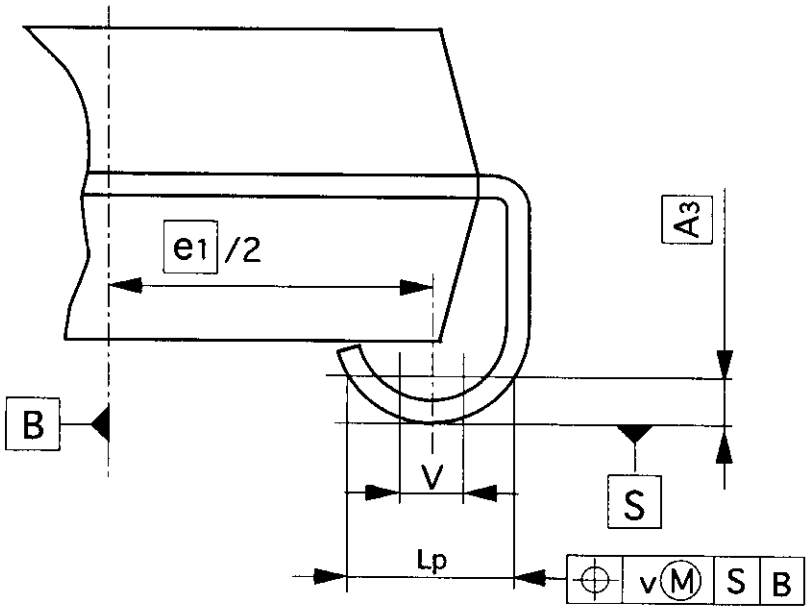


(2) Measuring method

(a) Put the package on the surface plane.

(b) Make the datum parallel with the measuring reference.

(c) Find the theoretically precise distance e/2 from the datum B. Then, check if the center of the soldered portion length Lp is within the tolerance v (range) specified as the center.

(3) Remarks

As this measuring method can only be done from the side, the values of the leads observable from the side are allowed as representative values.

## 6.9 Positional Tolerance of terminal x

(1) Definition

Let S and A denote datum as shown in the below figures. Obtain differences from the theoretical positions. Acceptable differences are defined as the tolerance at center positions of terminal.

Figure 11

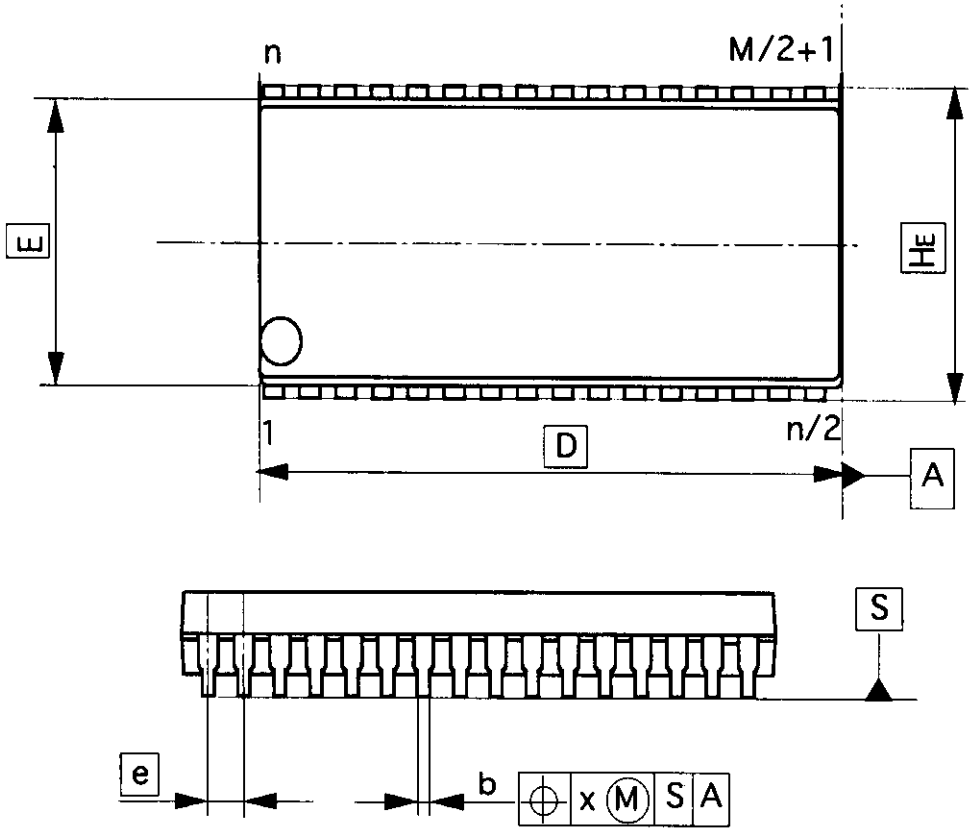


(2) Measuring method

(a) Put the package on the surface plate.

(b) Make the datum parallel with the measuring reference.

(c) Obtain positions of the centers of leads at the bottom points.

(d) Obtain the differences from the theoretical centers of the leads.

(e) Check the differences within the tolerance of lead center position.

(3) Remarks

In more detail,see explanation of item 3.1.

Figure 12

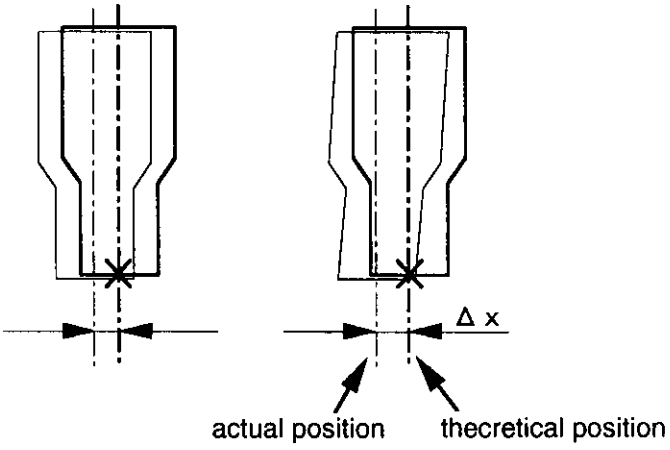


## 6.10 Coplanarity y

(1) Definition

The vertical distance from the seating plane to the lowest point of each lead shall be referred to as coplanarity of the lowest surfaces of the leads. The distance up to the lowest point of the lead furthest from the seating plane shall be defined as y.

Figure 13

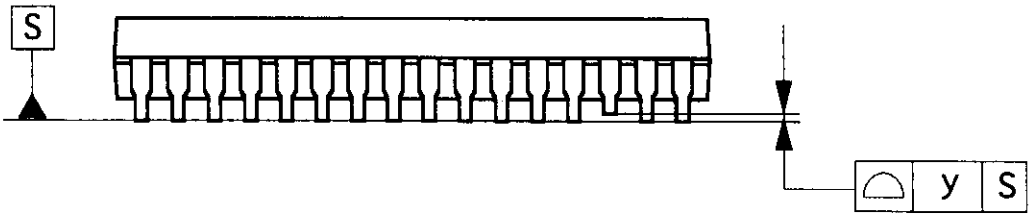


(2) Measuring method

(a) Put the package on the surface plate.

(b) Observe the lowest surface of all the leads from the front side of the leads to measure the vertical distances from the surface plate to the lowest surfaces.

(c) The maximum value of the distances shall be defined as the coplanarity y.

**note 1 :** Coplanarity may change because of the seesaw phenomenon.In the case of the seesaw, the larger y data should be adopted.
To avoid the seesaw's case, the virtual plane method can be the measuring method.

**note 2 :** Definition of Virtual Plane

Of the geometrical planes that pass the lowest points of given 3 leads, the plane on which the lowest points of all the leads exist on the package body side shall be referred to as the virtual plane. In this case, however, the center of the package gravity must exist inside of the triangle formed with the 3 points or on one side of the triangle.

If there are plural combination that satisfy the above conditions,the combination shall be adopted so that a larger y value may be obtained.

(3) Measuring method 2 (virtual plane method)

(a) Obtain the virtual plane.

(b) Measure the vertical distances from the virtual plane to the lowest surfaces of the terminal tips.

(c) The maximum value of the distances shall be defined as the coplanarity y.

# EXPLANATORY NOTES

## 1. OBJECTIVES OF THE ESTABLISHMENT

This standard was established to determine a measuring method of the dimensions provided in "Package Design Guideline of Integrated Circuits".

## 2. BACKGROUND OF DELIBERATION

The Outer Dimension Measuring Method Project has established the standard measuring method of the dimensions provided in "Package Design Guideline of Integrated Circuits", beginning with QFP, SOP, then BGA, in order to make no difference of the measurement results between user and supplier. SOJ was deliberated by the same project this time, approved in writing by the Semiconductor Package Standardization Committee, and determined to establish and issue as a standard.

## 3. MAIN DELIBERATIONS

### 3.1 Tolerance of terminal center position

In the package design guideline of integrated circuits, the tolerance (reference letter, "x") of the terminal center position is indicated in geometrical tolerance and additional symbols. The values are indicated in this item as the tolerances of the terminal center positions related to the terminal straight line interval and terminal width. They include the terminal width, position degree tolerance symbol, terminal center tolerance (tolerance value), maximum body condition and reference datum. "Tolerance of terminal center position" shall be less than x/2 when the terminal width is maximum. When the terminal width is less than the maximum width, the offset ($\triangle x$) is moderated according to each value.

$\triangle X < (b_{max} - b + x)/2$

(1) Indicating method

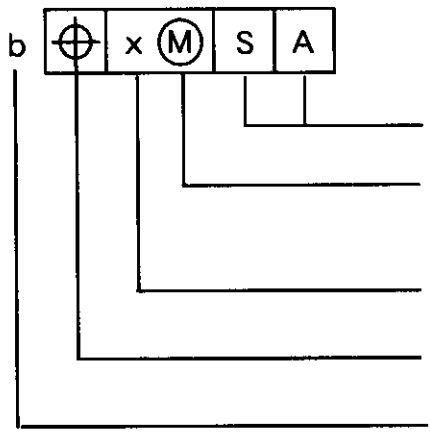


Reference datum

Maximum body condition: Indicates to be based on the tolerance limit dimensions so that the substantial body can be maximum.

Tolerance of terminal center position (Tolerance)

Position degree tolerance symbol: Offset from the true center position

Terminal width (indicates reference dimension and tolerance difference)

(2) Definition

Figure 1

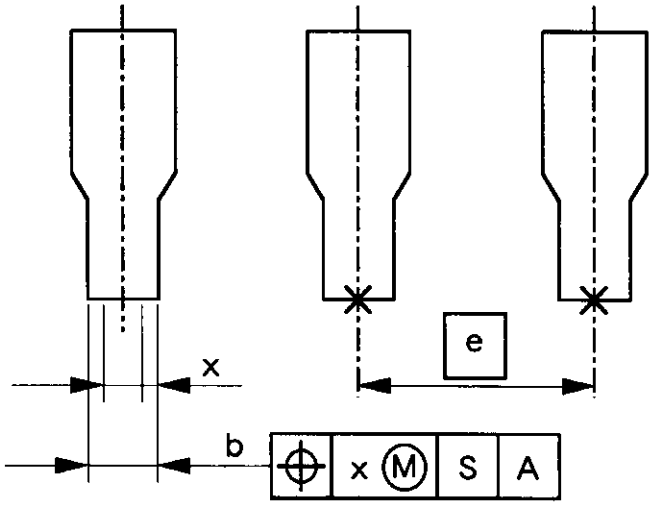


(3) Offset from terminal center position

The terminal tolerance range is fixed to the sum of the terminal width, $b_{max}$ and the tolerance of the terminal center position, x. Therefore, the offset from the terminal center position shall be x/2 when the terminal width is maximum, and less than $(b_{max} - b + x)/2$ when the width is b.

| | | | |
|---|---|---|---|
| Example: | Terminal straight line interval | : e | = 1.27 |
| | Terminal width | : $b_{max}$ | = 0.50 |
| | | : $b_{min}$ | = 0.39 |
| | Tolerance of terminal center position | : x | = 0.17 |

(a) When terminal width is maximum (0.50):

Figure 2

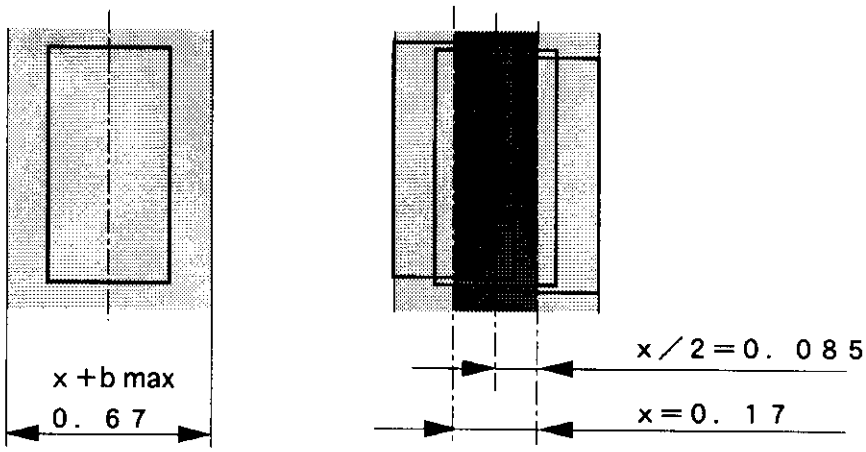


Tolerance Range of Terminal　　Tolerance Range of Terminal Center Position

(a) When terminal width is b=0.40:

Figure 3

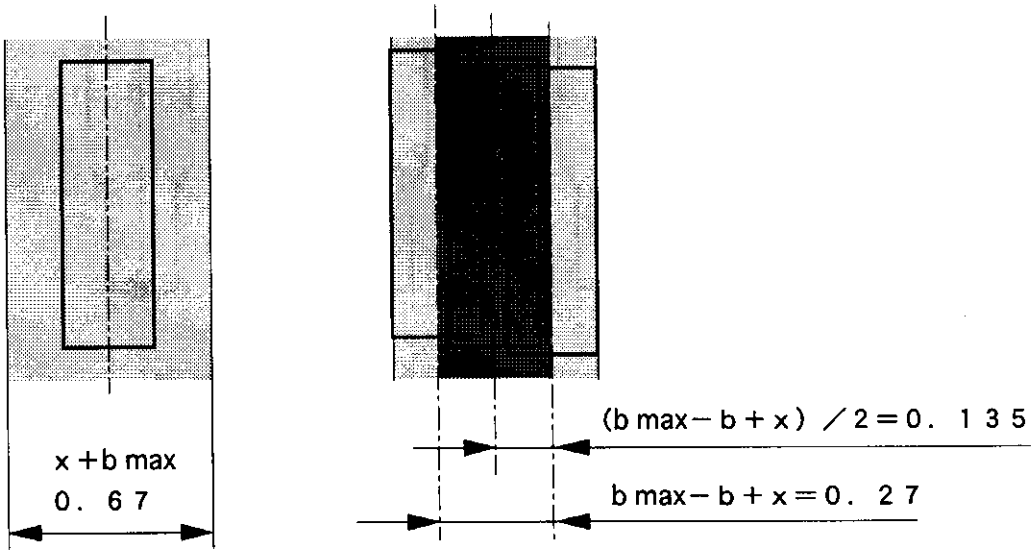


Tolerance Range of Terminal  Tolerance Range of Terminal Center Position

## 3.2 Body height (A2)

EIAJ ED-7300 defines that the package body height is the length from the base side to the top side of the package body. The base side shall pass through the bottom point of the package body parallel to the mounting side. However, the package height (A2) indicates the thickness of the package body, therefore the thickness is measured here.

## 3.3 Tolerance of Terminal Row Interval v

Although this tolerance is not defined in other standards, it is considered that it should be essentially defined. Therefore, it is defined in this standard. It is also determined to include this tolerance when establishing a design guide.

## 4. Committee Members

This measuring method was deliberated mainly by the Semiconductor Common Standard Sub-committee on the Semiconductor Package Standardization Committee and the Package Dimension Measuring Method Project Group. The members are as shown below.

**<Semiconductor Package Standardization Committee>**

| | | |
|---|---|---|
| Chairman | Toshiaki Shinohara | MITSUBISHI ELECTRIC CORPORATION |

**<Semiconductor Common Standard Sub-Committee>**

| | | |
|---|---|---|
| Chief | Michio Sono | FUJITSU LIMITED |

**<Package Dimension Measuring Method Project Group>**

| | | |
|---|---|---|
| Leader | Yasushi Otsuka | Sony Corp. |
| Sub-leader | Tsuneo Kobayashi | IBM Japan, LTD. |
| | Eiji Mizutani | KOMATSU Ltd. |
| | Hideo Taguchi | TOSHIBA CORPORATION |
| | Gohei Nanjoh | Nagase & Company, Ltd. |
| | Takahiro Naito | Hitachi, Ltd. |
| | Kenji Imamura | MITSUBISHI ELECTRIC CORPORATION |
| | Masahiko Fukuoka | YASUNAGA CORPORATION |