JEITA

Standard of Japan Electronics and Information Technology Industries Association

EIAJ ED-7311-17

Standard of integrated circuits packages (P-ZIP)

Established in June, 2001

Prepared by

Technical Standardization Committee on Semiconductor Device Package

Published by

Japan Electronics and Information Technology Industries Association

11, Kanda-surugadai 3-chome, Chiyoda-ku, Tokyo 101-0062, Japan

Printed in Japan

Translation without guarantee in the event of any doubt arising, the original standard in Japanese is to be evidence.

JEITA standards are established independently to any existing patents on the products, materials or processes they cover.
JEITA assumes absolutely no responsibility toward parties applying these standards or toward patent owners.

© 2001 by the Japan Electronics and Information Technology Industries Association

All rights reserved. No part of this standards may be reproduced in any form or by any means without prior permission in writing from the publisher.

Standard of Japan Electronics and Information Technology Industries Association

Standard of integrated circuits package (P-ZIP)

1. Scope of Application

This standard covers the registered dimensions of the Zigzag Inline packages/ Shrink Zigzag Inline packages, terminal straight $\boxed{e}$ pitch is 1.27mm (50mil)/ less than 0. 889mm (35 mil), among the packages classified as form C in the **EIAJ ED-7300** [Recommended practice on Standard for the preparation of outline drawings of semiconductor packages]

Note. This standard is the revision version to have integrated two standards into which **EIAJ ED-7405** (P-ZIP) and **EIAJ ED-7405-1** (P-SZIP).

2. Definition of the Technical Terms

The definition of the technical terms used in this technical report is in conformity with **EIAJ ED-7300**, and the definition of technical terms appearing a new are given within the text of this standard.

3. BACKGROUND

Recently, through hole type package P-ZIP with reduced print circuits board area were developed for small size electronics devices. This technical report intended to standardize the outer dimensions of P-ZIP, P-SZIP, and ensure compatibility between products as far as possible for standardization.

4. Definition of P-ZIP/P-SZIP

P-ZIP/P-SZIP is defined as Form C in the classification of shapes of semiconductor device at the **EIAJED-7300** and terminal straight pitch is 1.27mm (50mil)/ less than 0.889mm (35 mil) by bending terminal make a two lines in alternately forming leads from one package body side to a seating plane.

5. Numbering of Terminals

Numbering of terminals complies with the **EIAJ ED-7300**.

6. Nominal Dimensions

Package height × Package length is applied to Nominal Dimensions.
(Symbol : A_2 nom × D_1 nom)

7. REFERENCE CHARACTERS AND DRAWING

7.1 Outline Drawing

Figure 1

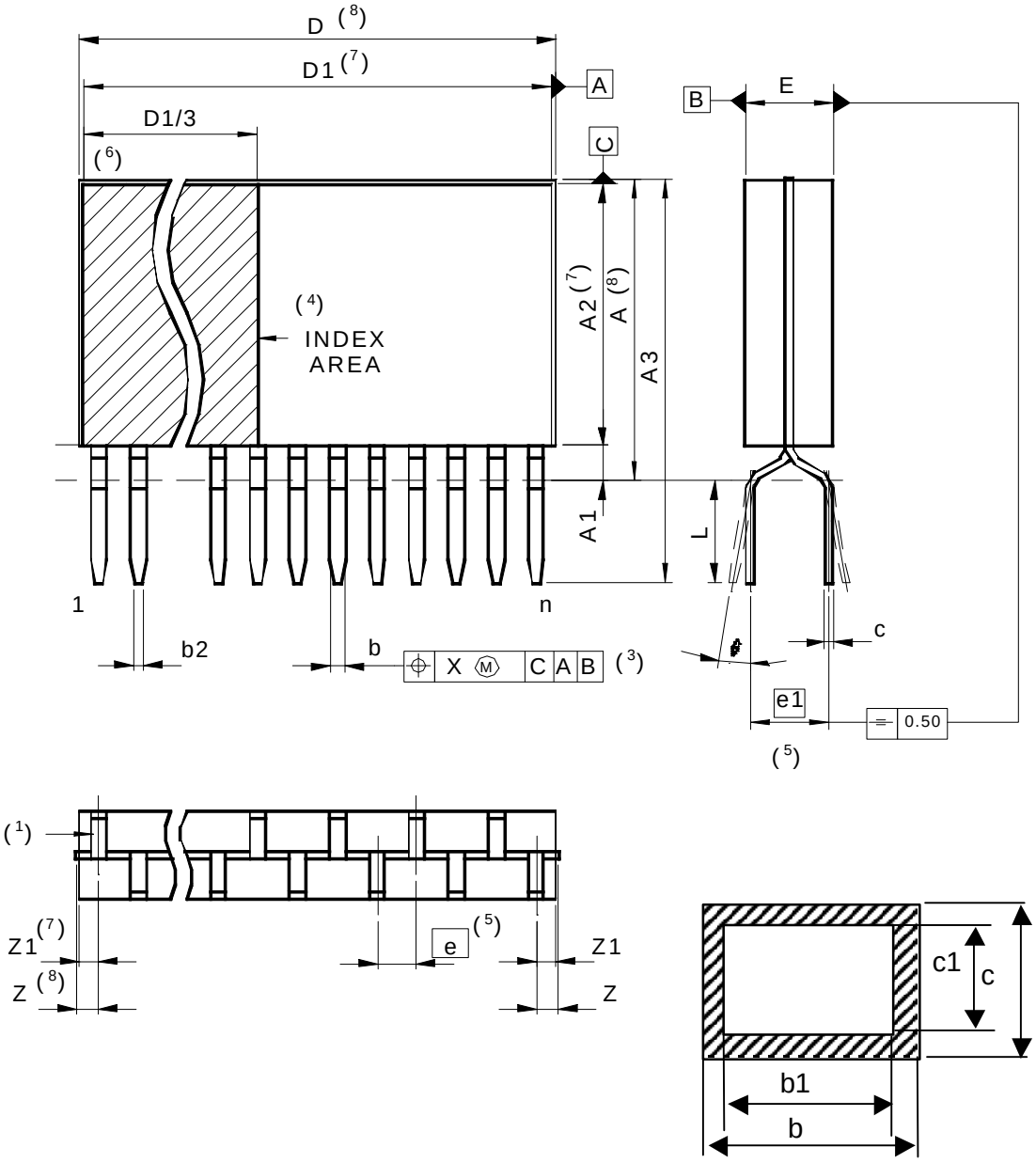

	JEITA STANDARD PACKAGE OUTLINE DRAWINGS	DATE 01-03-16	SHEET 1/11
PACKAGE NAME P-ZIP/SZIP		JEITA REGISTRATION NO. IC-7328-001	

Figure 2

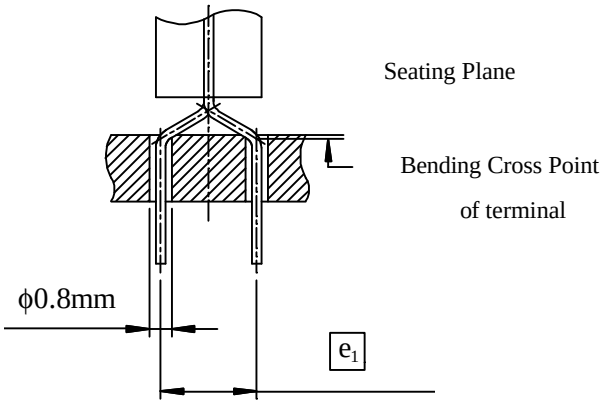

Figure 3

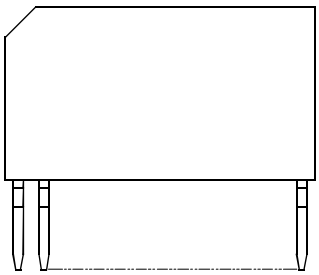

Notes:

(1) The bending direction of terminal No.1 is in the side of the terminal No.1 index.

(2) The seating plane is determined when the terminal is inserted to hole that of center is located in the matrix as modulus e / e1 .

(3) The maximum mounting conditions apply to the positional tolerance of the terminals.(For the maximum body conditions, refer to ISO/1101, part II)

(4) Shows the allowable position of the index mark, which of more than half must be included in the shaded area.

(5) Specifies the true geometric position of the terminal axis.

(6) The shapes of chanfer is recommended in **Figure 3**.

(7) Resin flash, leadframe cutting remain and gate remains are not included.

(8) Resin flash, leadframe cutting remain and gate remains are included.

8. Registration table

(Package name):P-ZIP/P-SZIP

(Registration number): IC-7311-17-00-00.0-XX

		Terminal pitch e	
Letter Code	A2nom	1.27	0.889
A	4.40		16-14.0-AA 16-14.0-AB 16-13.8-AC 16-13.8-AD
B	5.80	14-18.2-BA 18-23.3-BB	
C	6.80		21-19.4-CA
D	8.80	20-25.5-DA 20-25.5-DB 20-30.5-DC 22-30.2-DE 28-36.0-DF	
E	10.80	24-30.5-EA 40-51.2-EB	
F	12.80		64-54.0-FA

Note. The Numbers in the table indicate,
(Terminal number n)-(package length D1nom)-(serial number)

Serial Number		AA			AB		
External Type		P-SZIP16-4.3 × 14.0-0.89			P-SZIP16-4.3 × 14.0-0.89		
Reference Symbol		min	nom	max	min	nom	max
Group1	A	-	5.35	-	-	5.35	-
	A_1	-	1.00	-	-	1.00	-
	A_2		4.35			4.35	
	A_3	-	8.45	-	-	7.65	-
	b	0.36	0.40	0.48	0.36	0.40	0.48
	b_1	0.35	0.40	0.45	0.35	0.40	0.45
	b_2	0.00	0.15	0.30	0.00	0.15	0.30
	C	0.19	0.20	0.25	0.19	0.20	0.25
	C_1	0.19	0.20	0.21	0.19	0.20	0.21
	D	13.90	14.00	14.10	13.90	14.00	14.10
	D_1	-	14.00	-	-	14.00	-
	E	2.10	2.20	2.30	2.10	2.20	2.30
	$\boxed{e}$	-	0.889	-	-	0.889	-
	$\boxed{e_1}$	-	1.778	-	-	1.778	-
	θ	0°	4°	8°	0°	4°	8°
	x	-	0.23	-	-	0.23	-
	n	-	16	-	-	16	-
Group2	Z	-	0.61	-	-	0.61	-
	Z_1	-	0.508	-	-	0.508	-
	L	2.75	3.00	3.25	1.95	2.20	2.45

	JEITA STANDARD PACKAGE OUTLINE DRAWINGS	DATE 01-03-16	SHEET 4/11
PACKAGE NAME P-ZIP/SZIP		JEITA REGISTRATION NO. IC-7328-001	

Serial Number		AC			AD		
External Type		P-SZIP16-4.35 × 13.8-0.89			P-SZIP16-4.35 × 13.8-0.89		
Reference Symbol		min	nom	max	min	nom	max
Group1	A	5.08	5.40	5.715	5.08	5.40	5.715
	A_1	0.95	1.10	1.25	0.95	1.10	1.25
	A_2	4.25	4.35	4.45	4.25	4.35	4.45
	A_3	7.62	8.50	9.779	7.62	7.70	9.779
	b	0.30	0.40	0.45	0.30	0.40	0.45
	b_1	0.35	0.40	0.45	0.35	0.40	0.45
	b_2	0.20	0.25	0.30	0.20	0.25	0.30
	C	0.15	0.20	0.30	0.15	0.20	0.30
	C_1	0.15	0.20	0.25	0.15	0.20	0.25
	D	13.9	14.0	14.4	13.9	14.0	14.4
	D_1	13.7	13.8	14.2	13.7	13.8	14.2
	E	2.10	2.20	2.30	2.10	2.20	2.30
	$\boxed{e}$	-	0.889	-	-	0.889	-
	$\boxed{e_1}$	-	1.778	-	-	1.778	-
	θ	0°	4°	8°	0°	4°	8°
	x	-	-	0.25	-	-	0.25
	n	-	16	-	-	16	-
Group2	Z	-	0.33	-	-	0.33	-
	Z_1	-	0.23	-	-	0.23	-
	L	2.85	3.10	3.35	2.05	2.30	2.55

Serial Number		BA			BB		
External Type		P-ZIP14-6.0 × 18.2-1.27			P-ZIP18-6.0 × 23.3-1.27		
Reference Symbol		min	nom	max	min	nom	max
Group1	A	7.76	8.26	8.76	7.76	8.26	8.76
	A_1	1.76	2.26	2.76	1.76	2.26	2.76
	A_2	5.7	6.0	6.3	5.7	6.0	6.3
	A_3	10.56	11.26	11.76	10.56	11.26	11.76
	b	0.40	0.50	0.60	0.40	0.50	0.60
	b_1	0.45	0.50	0.55	0.45	0.50	0.55
	b_2	0.20	0.25	0.35	0.20	0.25	0.35
	C	0.20	0.25	0.35	0.20	0.25	0.35
	C_1	0.20	0.25	0.35	0.20	0.25	0.35
	D	17.9	18.2	18.5	23.0	23.3	23.6
	D_1	18.0	18.2	18.4	23.1	23.3	23.5
	E	2.7	3.0	3.3	2.7	3.0	3.3
	$\boxed{e}$	-	1.27	-	-	1.27	-
	$\boxed{e_1}$	-	2.54	-	-	2.54	-
	θ	0°	4°	8°	0°	4°	8°
	x	-	-	0.25	-	-	0.25
	n	-	14	-	-	18	-
Group2	Z	-	0.895	-	-	0.895	-
	Z_1	-	0.865	-	-	0.865	-
	L	2.5	3.0	3.5	2.5	3.0	3.5

	JEITA STANDARD PACKAGE OUTLINE DRAWINGS	DATE 01-03-16	SHEET 6/11
PACKAGE NAME P-ZIP/SZIP		JEITA REGISTRATION NO. IC-7328-001	

Serial Number		CA					
External Type		P-SZIP21-6.3 × 19.4-0.89					
Reference Symbol		min	nom	max			
Group1	A			8.03			
	A_1	0.93	1.23	1.53			
	A_2	6.10	6.30	6.50			
	A_3			11.33			
	b	0.35	0.45	0.55			
	b_1	0.40	0.45	0.50			
	b_2	0.20	0.25	0.30			
	C	0.20	0.25	0.35			
	C_1	0.20	0.25	0.30			
	D			19.90			
	D_1	19.20	19.40	19.60			
	E	3.00	3.20	3.40			
	$\boxed{e}$		0.889				
	$\boxed{e_1}$		2.54				
	θ	0°	4°	8°			
	x			0.25			
	n		21				
Group2	Z		0.96				
	Z_1		0.81				
	L	2.70	3.00	3.30			

	JEITA STANDARD PACKAGE OUTLINE DRAWINGS	DATE 01-03-16	SHEET 7/11
PACKAGE NAME P-ZIP/SZIP		JEITA REGISTRATION NO. IC-7328-001	

Serial Number		DA			DB		
External Type		P-ZIP20-8.5 × 25.5-1.27			P-ZIP20-8.96 × 25.5-1.27		
Reference Symbol		min	nom	max	min	nom	max
Group1	A	9.53	9.80	10.16	9.53	9.80	10.16
	A_1	0.76	1.30	1.86	0.76	0.85	1.00
	A_2	8.30	8.50	8.80	8.66	8.96	9.26
	A_3	12.63	13.10	13.66	12.61	13.11	13.61
	b	0.44	0.52	0.60	0.44	0.52	0.60
	b_1	0.47	0.52	0.57	0.47	0.52	0.57
	b_2	0.15	0.25	0.35	0.15	0.25	0.35
	C	0.19	0.27	0.35	0.14	0.22	0.30
	C_1	0.22	0.27	0.32	0.17	0.22	0.27
	D	25.25	25.50	25.75	25.25	25.50	25.75
	D_1	25.35	25.50	25.65	25.35	25.50	25.65
	E	2.65	2.80	2.95	2.65	2.80	2.95
	$\boxed{e}$	-	1.27	-	-	1.27	-
	$\boxed{e_1}$	-	2.54	-	-	2.54	-
	θ	0°	4°	8°	0°	4°	8°
	x	-	-	0.25	-	-	0.25
	n	-	20	-	-	20	-
Group2	Z	-	0.685	-	-	0.685	-
	Z_1	-	0.685	-	-	0.685	-
	L	3.10	3.30	3.50	3.10	3.30	3.50

	JEITA STANDARD PACKAGE OUTLINE DRAWINGS	DATE 01-03-16	SHEET 8/11
PACKAGE NAME P-ZIP/SZIP		JEITA REGISTRATION NO. IC-7328-001	

Serial Number		DC			DE		
External Type		P-ZIP20-8.5 × 30.5-1.27			P-ZIP22-8.5 × 30.2-1.27		
Reference Symbol		min	nom	max	min	nom	max
Group1	A	9.53	9.80	10.16	9.70	9.80	10.30
	A_1	0.90	1.10	1.30	1.30	1.80	2.30
	A_2	8.30	8.50	8.80	8.40	8.50	8.60
	A_3	12.40	12.90	13.40	12.85	13.20	13.95
	b	0.44	0.52	0.60	0.45	0.50	0.65
	b_1	0.47	0.52	0.57	0.45	0.50	0.55
	b_2	0.15	0.25	0.35	0.20	0.25	0.30
	C	0.19	0.27	0.35	0.20	0.25	0.40
	C_1	0.22	0.27	0.32	0.20	0.25	0.30
	D	30.25	30.50	30.75	30.15	30.40	30.65
	D_1	30.35	30.50	30.65	30.10	30.20	30.30
	E	2.65	2.80	2.95	2.90	3.00	3.10
	$\boxed{e}$	-	1.27	-	-	1.27	-
	$\boxed{e_1}$	-	2.54	-	-	2.54	-
	θ	0°	4°	8°	0°	4°	8°
	x	-	-	0.25	-	-	0.25
	n	-	20	-	-	22	-
Group2	Z	-	3.185	-	-	1.87	-
	Z_1	-	3.185	-	-	1.77	-
	L	3.10	3.30	3.50	3.15	3.40	3.65

	JEITA STANDARD PACKAGE OUTLINE DRAWINGS	DATE 01-03-16	SHEET 9/11
PACKAGE NAME P-ZIP/SZIP		JEITA REGISTRATION NO. IC-7328-001	

Serial Number		EA			EB		
External Type		P-ZIP24-10.7 × 30.5-1.27			P-ZIP40-10.7 × 51.2-1.27		
Reference Symbol		min	nom	max	min	nom	max
Group1	A	11.40	11.70	12.00	11.40	11.70	12.00
	A_1	0.80	1.00	1.20	0.80	1.00	1.20
	A_2	10.40	10.70	11.00	10.40	10.70	11.00
	A_3	14.50	15.00	15.50	14.50	15.00	15.50
	b	0.44	0.52	0.60	0.44	0.52	0.60
	b_1	0.47	0.52	0.57	0.47	0.52	0.57
	b_2	0.15	0.25	0.35	0.15	0.25	0.35
	C	0.19	0.27	0.35	0.19	0.27	0.35
	C_1	0.22	0.27	0.32	0.22	0.27	0.32
	D	30.25	30.50	30.75	49.95	51.20	51.45
	D_1	30.35	30.50	30.65	50.05	51.20	51.35
	E	2.65	2.80	2.95	2.65	2.80	2.95
	$\boxed{e}$	-	1.27	-	-	1.27	-
	$\boxed{e_1}$	-	2.54	-	-	2.54	-
	θ	0°	4°	8°	0°	4°	8°
	x	-	-	0.25	-	-	0.25
	n	-	24	-	-	40	-
Group2	Z	-	0.645	-	-	0.835	-
	Z_1	-	0.645	-	-	0.835	-
	L	3.10	3.30	3.50	3.10	3.30	3.50

	JEITA STANDARD PACKAGE OUTLINE DRAWINGS	DATE 01-03-16	SHEET 10/11
PACKAGE NAME P-ZIP/SZIP		JEITA REGISTRATION NO. IC-7328-001	

Serial Number		DE			FA		
External Type		P-ZIP22-8.5 × 30.2-1.27			P-SZIP64-13.75 × 54-0.82		
Reference Symbol		min	nom	max	min	nom	max
Group1	A	9.70	9.80	10.30			16.30
	A_1	1.30	1.80	2.30		2.00	
	A_2	8.40	8.50	8.60	13.60	13.75	13.90
	A_3	12.85	13.20	13.95			19.10
	b	0.45	0.50	0.65	0.30	0.40	0.50
	b_1	0.45	0.50	0.55	0.35	0.40	0.45
	b_2	0.20	0.25	0.30	0.20	0.25	0.30
	C	0.20	0.25	0.40	0.20	0.25	0.35
	C_1	0.20	0.25	0.30	0.20	0.25	0.30
	D	30.15	30.40	30.65			54.50
	D_1	30.10	30.20	30.30	53.80	54.00	54.20
	E	2.90	3.00	3.10	3.45	3.55	3.65
	$\boxed{e}$	-	1.27	-		0.82	
	$\boxed{e_1}$	-	2.54	-		2.54	
	θ	0°	4°	8°	0°	4°	8°
	x	-	-	0.25			0.25
	n	-	22	-		64	
Group2	Z	-	1.87	-		1.32	
	Z_1	-	1.77	-		1.17	
	L	3.15	3.40	3.65	2.30	2.60	2.90

	JEITA STANDARD PACKAGE OUTLINE DRAWINGS	DATE 01-03-16	SHEET 11/11
PACKAGE NAME P-ZIP/SZIP		JEITA REGISTRATION NO. IC-7328-001	

COMMITTEE MEMBERS

The Peripheral Package Subcommittee of the Technical Standardization Committee on Semiconductor Device Packages has mainly deliberated this standard.
The subcommittee members are shown below.

<Technical Standardization Committee on Semiconductor Device Package>

Chairman	ELPIDA MEMORY,INC.	Ichiro Anjo

<IC Package Subcommittee>

Chief	SANYO ELECTRIC CORP.	Hideyuki Iwamura
Co-chief	SHARP CORP.	Katuyuki Tarui
	FUJITSU LTD.	Fumihiko Taniguchi
	TOSHIBA CORP.	Yasuhiro Koshio
	MATSUSHITA ELECTRIC INDUSTRIAL CO.,LTD.	Toshiyuki Fukuda
Members	AMKOR TECHNOROGY JAPAN.INC	Naomichi Shoji
	ENPLAS CORP.	Yoshiyuki Ohashi
	ENPLAS CORP.	Hisao Oshima
	OKI ELECTRONICS INDUSTRY CO.,LTD.	Kazuhiko Sera
	KYOCERA CORP.	Akihiro Funahashi
	KOGUNEX	Takahiro Aoki
	SANYO ELECTRIC CORP.	Kiyoshi Mita
	SUMITOMO 3M CORP.	Akiko Tsubota
	SEIKO EPSON CORP.	Yoshiaki Emoto
	SONY CORP.	Hiroshi Abe
	TOSHIBA CORP.	Morihiko Ikemizu
	NEC CORP.	Kaoru Sonobe
	NEC CORP.	Kenichi Kurihara
	IBM JAPAN CORP.	Tuneo Kobayashi
	TEXAS INSTRUMENTS JAPAN LTD.	Kenji Masumoto
	NGK CORP.	Katsuaki Sugino
	HITACHI LTD.	Yoshinori Miyaki
	HITACHI Cable LTD.	Tadashi Kawanobe
	FUJITSU LTD.	Kaoru Tachibana
	FUJI ELECTRIC CO.,LTD.	Osamu Hirohashi
	MATSUSHITA ELECTRIC INDUSTRIAL CO.,LTD.	Tomoki Tamaki
	MITSUBISHI ELECTRIC CORP.	Kazuya Fukuhara
	MELCO INC.	Tsuneo Watanabe
	YAMAICHI ELECTRIC CO.,LTD.	Noriyuki Matsuoka
	UNITECHNO INC.	Hitoshi Matsunaga
	ROHM CO.,LTD.	Osamu Miyata
Special Members	SHIN-ETSU POLYMER	Ken Tamura
	TOYOJUSHI CO.,LTD.	Hitoshi Kazuma