Standard of Electronic Industries Association of Japan

EIAJ ED-7401-4

Method of Measuring Semiconductor Device Package Dimensions
(Integrated Circuits)

Established in May, 1995

Prepared by

Technical Standardization Committee on Semiconductor Device Package

Published by

Electronic Industries Association of Japan

Standard of Electronic Industries Association of Japan

Method of Measuring Specified Dimensions for Semiconductor Device Packages (Integrated Circuits)

1. Scope This standard stipulates a method for measuring dimensions specified in the general dimensions rules of the QFP (ref. EIAJ ED-7401A).

2. Definition of terms The main terms used in this standard are as defined below and new terms are defined in the text.

(1) EIAJ ED-7401A Basic standard for preparation of general dimensions rules of semiconductor device packages
(2) EIAJ ED-7404B Quad flat packages of integrated circuits general dimensions rules
(3) JIS Z 8310 General rules of drawing
(4) JIS B 0021 Illustrating method of geometrical tolerance
(5) JIS B 0061 Definition and display of geometrical deviations
(6) ANSI Y14.5M Dimensioning and tolerating

3. History External dimensions of packages for semiconductor devices are specified in the general dimensions rules. However, the specified external dimensions have been measured in a variety of methods by companies. As a result, measured results are so different that some trouble has occurred between semiconductor manufacturers and users. Further, there are some dimensions specified in the general dimensions rules that are very difficult to measure. This standard is set up to make the definitions of the specified dimensions clear and to standardize the measuring method of them.

4. Definition of measuring method The measuring method in this standard is defined for dimension values guaranteed to users on the basis of the following items.

(1) In general, measuring the dimensions shall be made with the semiconductor packages mounted on printed circuit board as the guarantee is made to user.
(2) In general, measurement may be made either by hand or automatically.
(3) Even if a measuring method deviates out of the original definition of dimensions, it is defined as an alternative measuring method as long as it is equivalent in view of accuracy and can be used easily.
(4) The dimensions that cannot be measured unless the package is destruyed may be calculated from other dimensions or alternated by representative values.

5. Measuring method

5.1 Reference characters and drawings

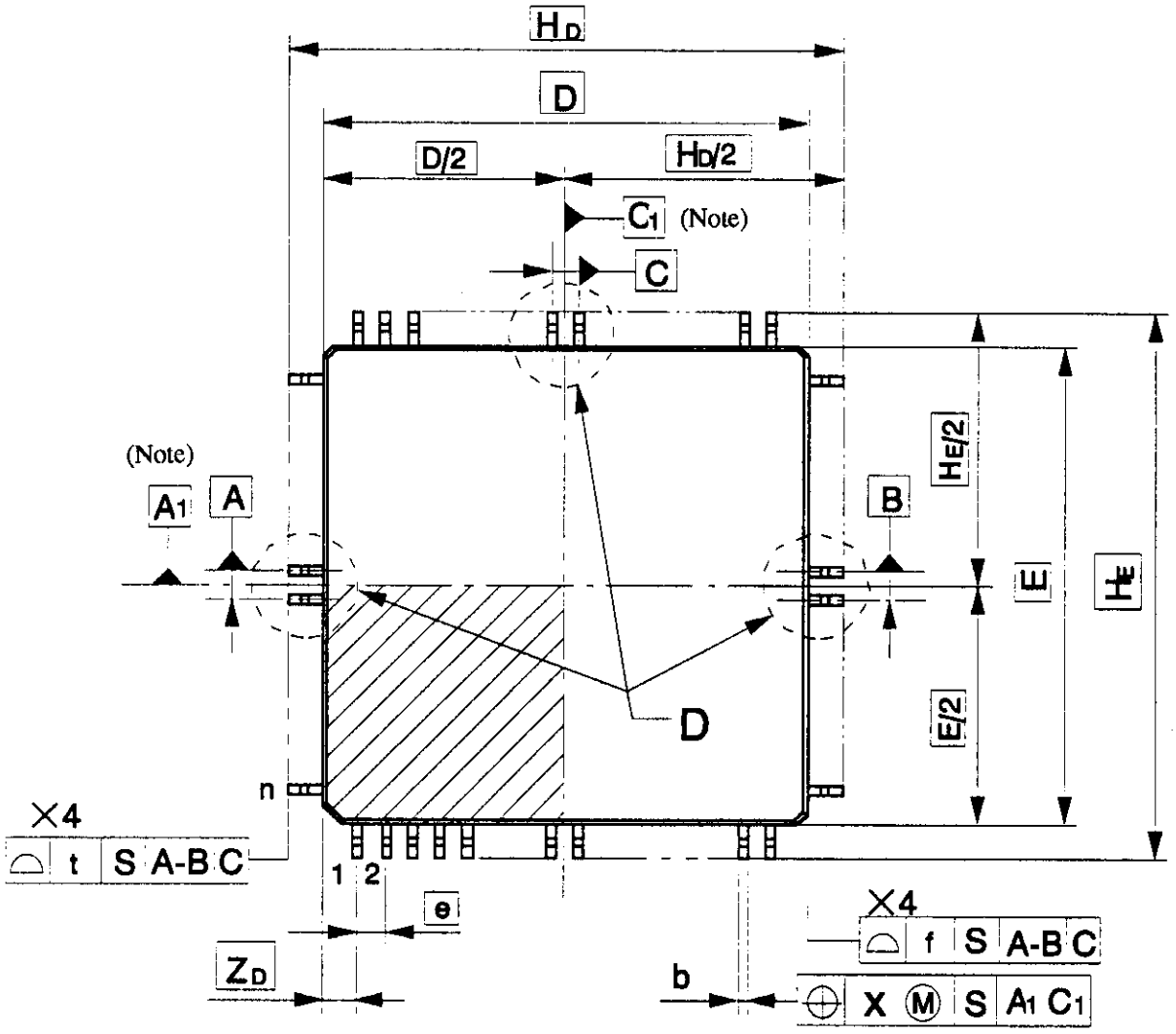

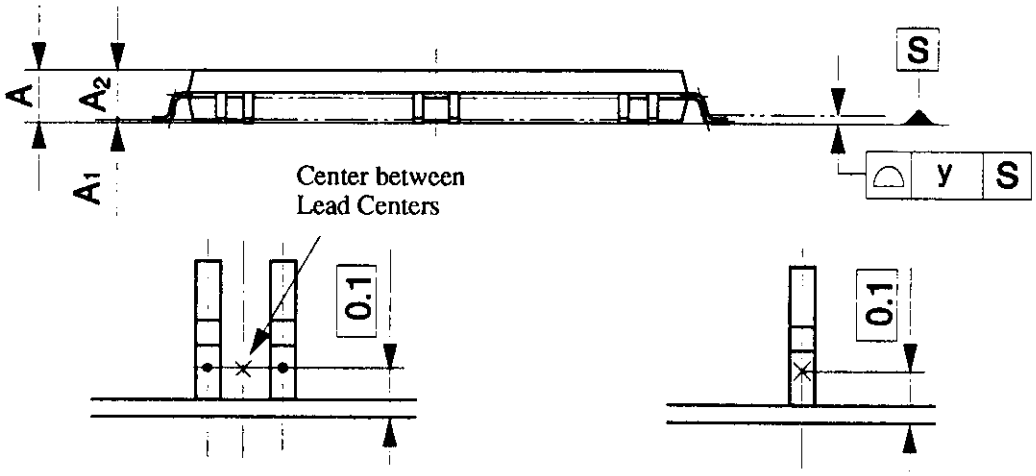

For even number of leads on a package side For odd number of leads on a package side

Detail D

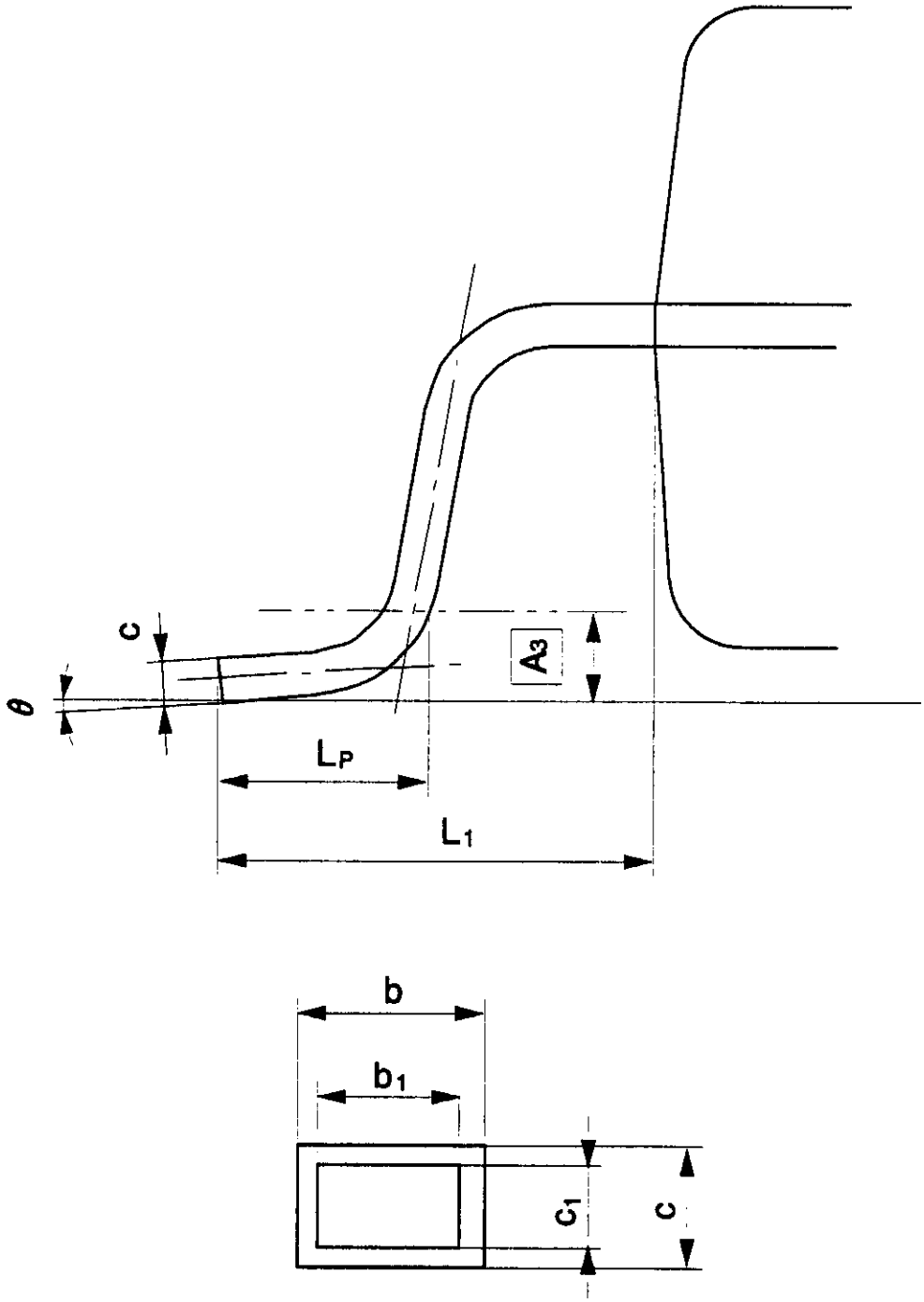

Note: Refer to 5.1.2 for the datum of the lead position accuracy.

5.2 Datum of Lead Position The datum of the lead position accuracy shall be defined as follows.

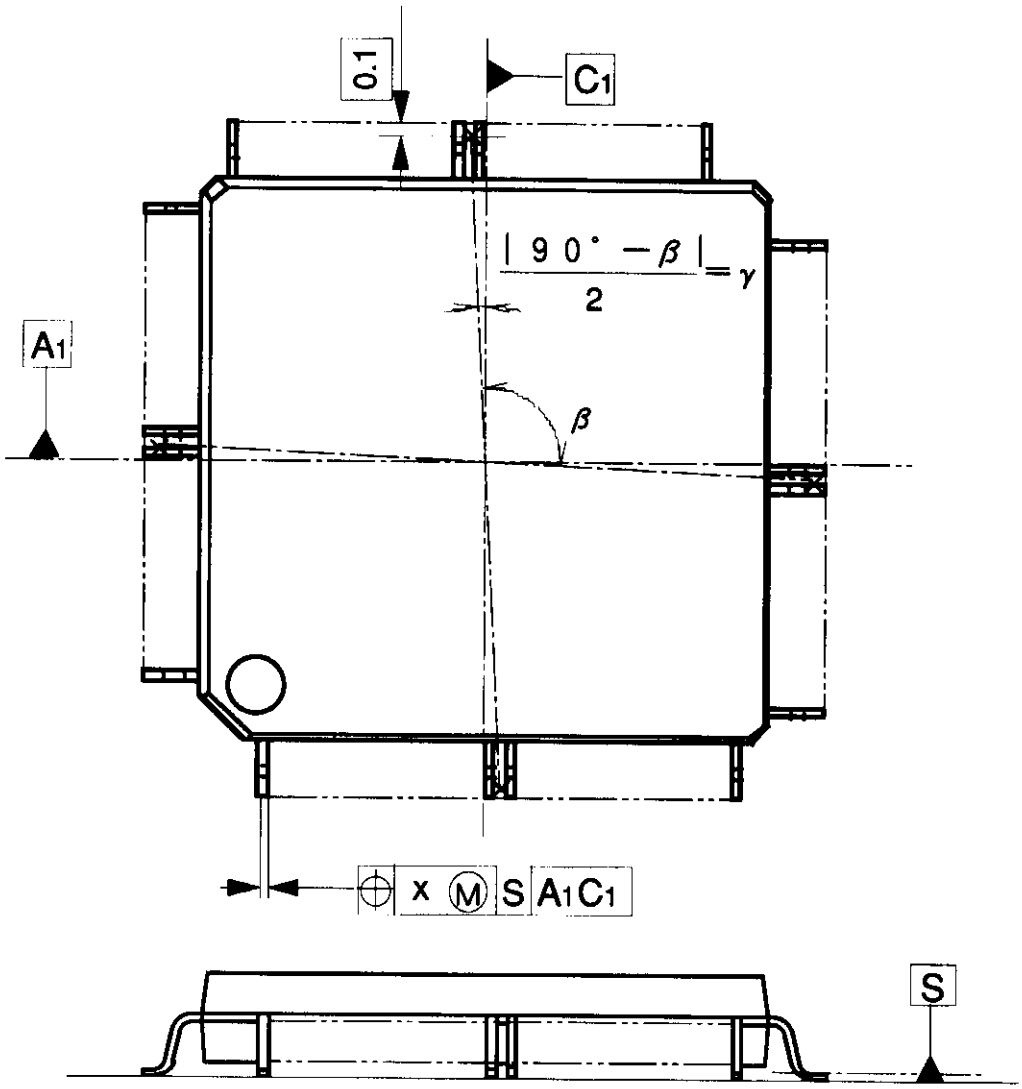

Centers of opposite sides of a package, which are defined below, shall be connected together. An angle β subtended by the two crossing lines shall be obtained. A difference |90° - β| of the angle β from 90° shall be equally distributed to the sides to obtain a crthogonal axes. The rectangular axis are depicted as datum lines A1 and B1 of the package.
Definition of the centers of sides

(1) For even number of leads on a package side

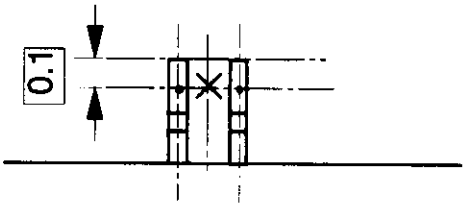

The center of facing sides of adjacent leads at a position 0.1 mm inside top of the leads

(2) For odd number of leads on a package side

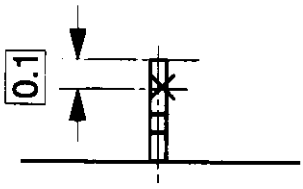

The center of leads at a position 0.1 mm inside top of the leads

6. MEASURING METHOD

6.1 Overall width HE/overall length HD Package width D/package length E

(1) Definition

(a) As to the overall width and overall length, all the lead tops should be located within the range t centering on the position which is at a theoretically correct distance of HE/2 or HD/2 from the datum A, B, or C.

(b) As to the package width and length, the package end face should be located within the range f centering on the position which is at a theoretically correct distance of E/2 or D/2 from the datum A, B, or C.

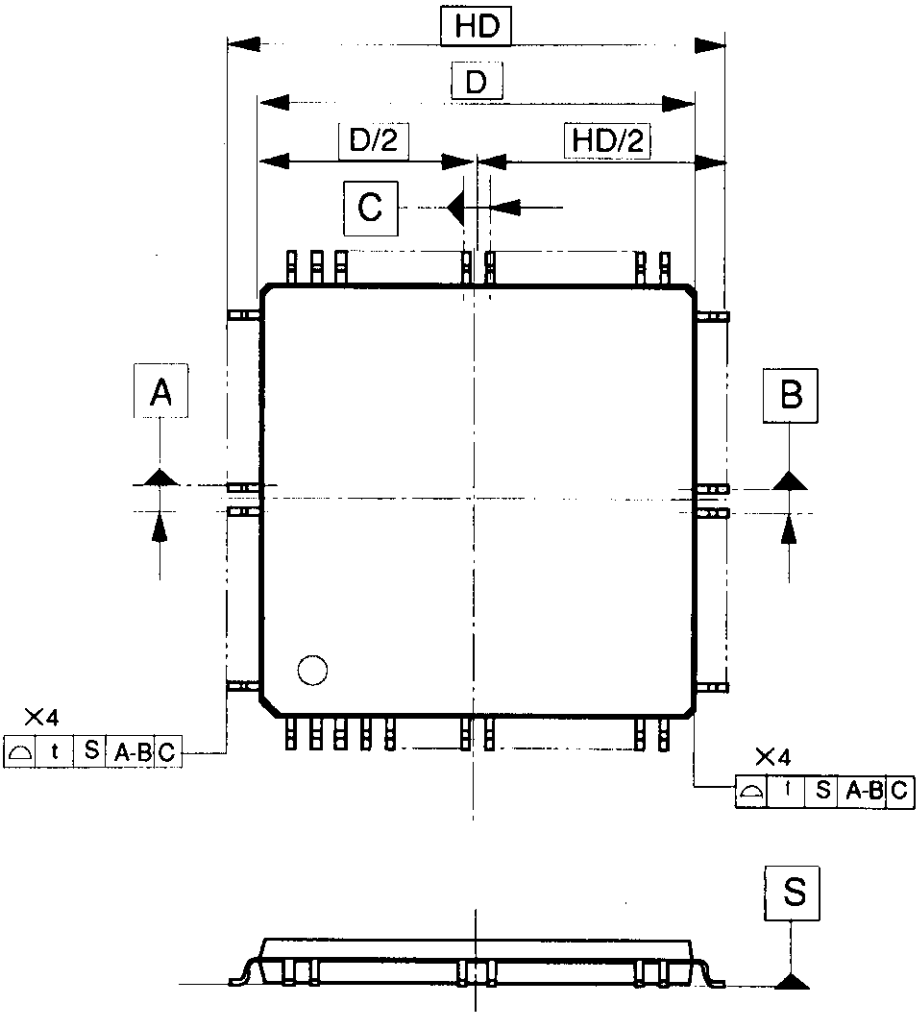

(2) Reference of measuring instruments (or equipment) to be used

(a) Projector: Magnifying power of 10 times and measuring accuracy of 10 μm.

(b) Metallographic microscope: Magnifying power of 30 times and measuring accuracy of 5 μm.

(3) Measuring method

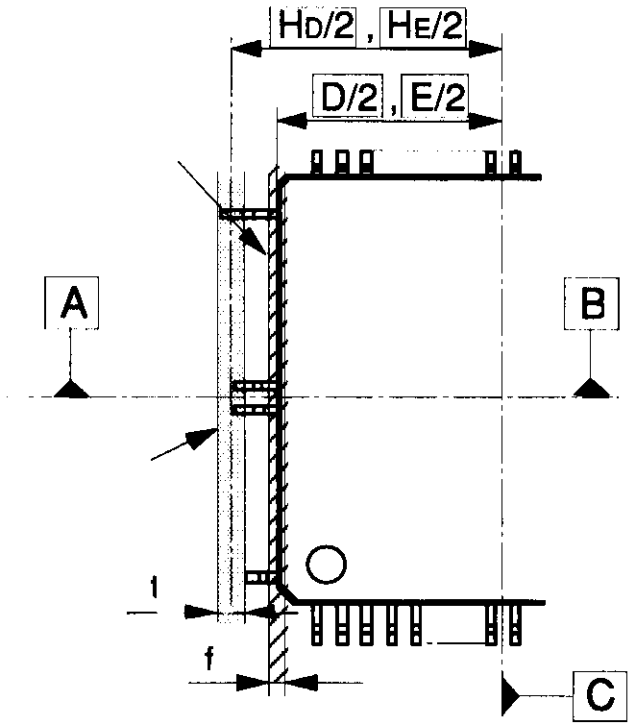

(a) HE/HD

(a-1) Put the package on the surface plate.

(a-2) Make the datum A-B and C coincide with the measuring reference.

(a-3) Find the logically precise distances HD/2 and HE/2 from the data A-B and C. Then, check if the tip of every lead on each package side is within the tolerance t (range) specified as the center.

(b) E/D

(b-1) Put the package on the surface plate.

(b-2) Make the data A-B and C coincide with the measuring reference.

(b-3) Find the theoretically precise distances D/2 and E/2 from the data A-B and C. Then, check if the tip of every lead on each package side is within the tolerance *f* (range) specified as the center.

(4) Quick measuring method

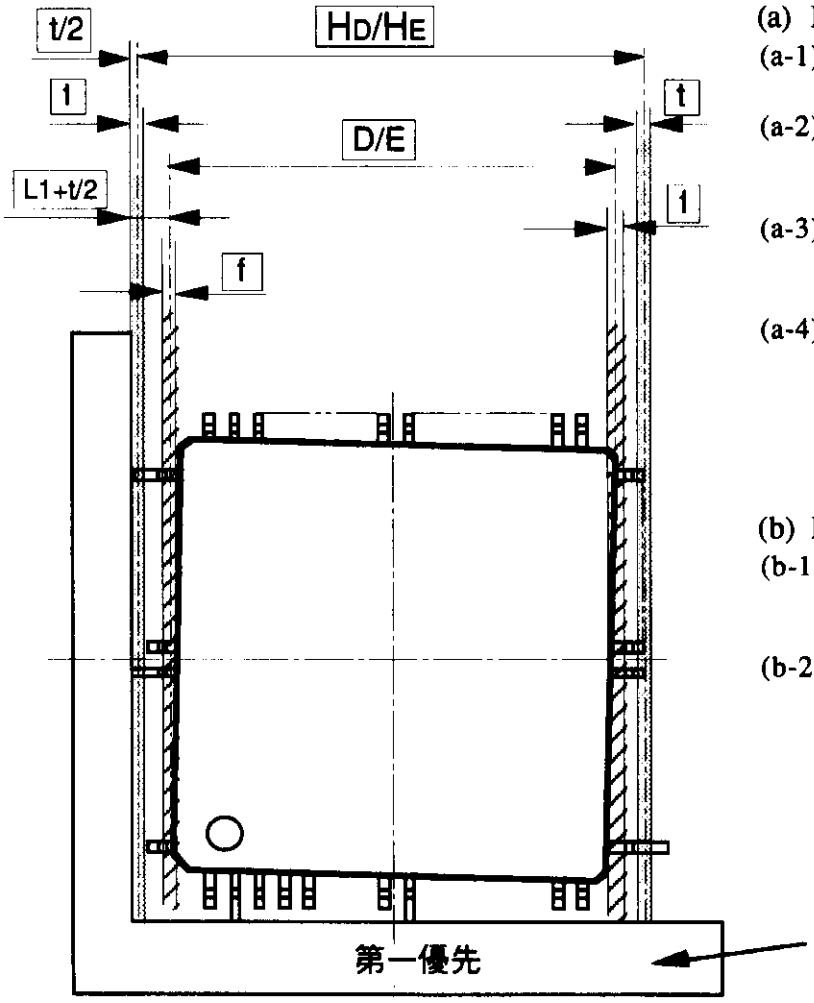

(a) HE/HD

(a-1) Put the package on the surface plate.

(a-2) At first, press the package side on which pin 1 is located against the gauge block of right angles.

(a-3) Move the package along the pin 1 side gauge and press it against the other side gauge.

(a-4) Make sure the package is within the theoretically precise ranges of 0 to t, HD to HD+t, and HE to HE+t when measured from the gauge block.

(b) E/D

(b-1) Put the package on the surface plate just like in the case of HD/HE.

(b-2) Make sure the package is within the theoretically precise ranges of L1+ t/2-f/2 to L1+t/2+f/2 and L1+t/2+(D or E)-f/2 to L1+t/2+(D or E)+f/2.

6.2 Mounting height A

(1) Definition

(a) Let the height of a package from the reference surface to the top of the package be denoted as the mounting height. The mounting height therefore includes inclination and warping of the package.

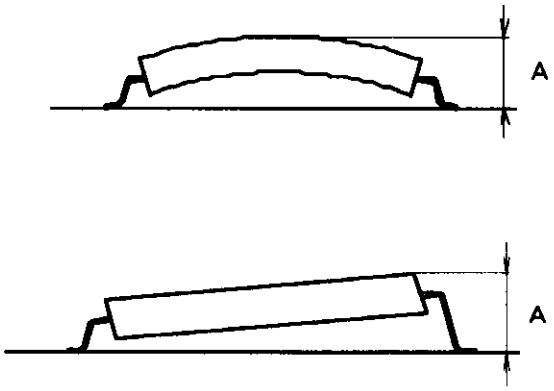

(2) Measuring instruments (or equipment) to be used

(a) Laser displacement meter — Measuring accuracy: 5 μm

(b) Projector: — Magnifying power of 10 times and measuring accuracy of 10 μm.

(c) Metallographic microscope: — Magnifying power of 30 times and measuring accuracy of 5 μm.

(3) Measuring method

(a) Put the package on the surface plate.

(b) From the side or top, measure the distance to the height point. Let the distance be denoted as the mounting height.

6.3 Stand-off A1

(1) Definition

(a) Let a distance from the reference surface to the lowest point of a package be denoted as the stand-off.

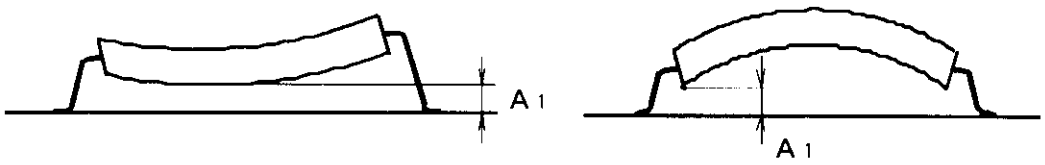

(2) Reference of measuring instruments (or equipment) to be used

(a) Projector: Magnifying power of 10 times and measuring accuracy of 10 μm.

(b) Metallographic microscope: Magnifying power of 30 times and measuring accuracy of 5 μm.

(3) Measuring method

(a) Put the package on the surface plate.

(b) Measure a distance from the reference surface (surface plate) to the lowest point of the package.

6.4 Body thickness A2

(1) Definition

(a) The body thickness is defined as a distance between planes, parallel to the reference surface, tangent to the highest and lowest points of the body.

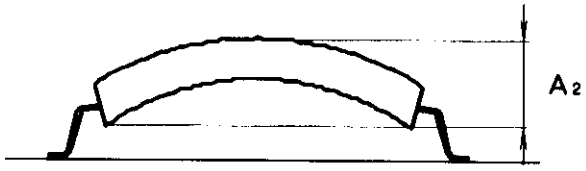

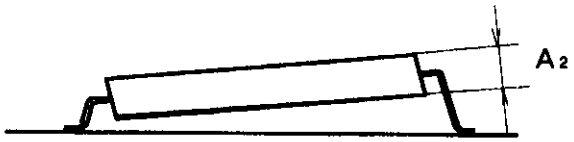

(2) Reference of measuring instruments (or equipment) to be used

(a) Micrometer

(b) Verniercaliper

(3) Measuring method

(a) Put the package, which is accurately dimensioned, between surface plates which are larger than the package vertically in parallel. Never touch the leads.

(b) Measure the total thickness including the surface plates with a micrometer and subtract the thickness of surface plates from the total thickness so as to obtain the thickness of package.

(4) Quick measuring method

(a) Put the vernier caliper on each of the diagonal lines (two directions) of the package. Let the maximum value be denoted as the body thickness.

6.5 Lead widths b and b_1, lead thicknesses c and c_1

(1) Definition

The outmost width and outmost thickness in a range of 0.1 to 0.25 mm from the tip of the stable shape of the lead having little burrs and crushing shall be defined as the lead width and lead thickness. The lead width and lead thickness, as shown in the right figure, include burrs, crushing, and sagging.
In this case, the outmost width and outmost thickness after surface plating shall be defined as b and c, and the outmost width and outmost thickness before surface plating shall be defined as b1 and c1 respectively.

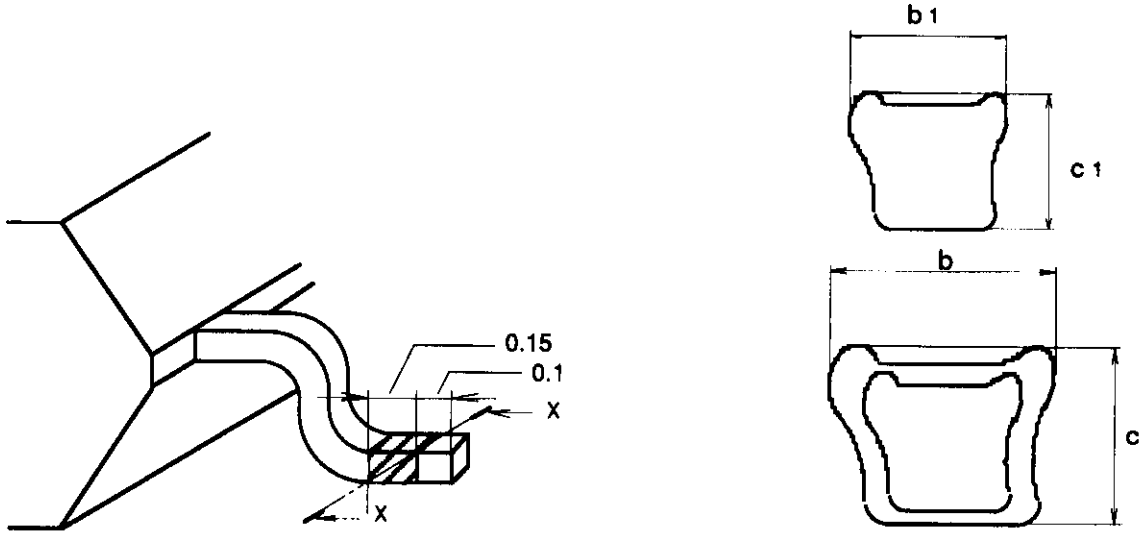

(2) Measuring instruments (or equipment) to be used

(a) Projector: Magnifying power of 10 times and measuring accuracy of 10 μm.

(b) Metallographic microscope: Magnifying power of 30 times and measuring accuracy of 5 μm.

(3) Measuring method

Lead widths b and b_1
(a) Put the package on the surface plate.
(b) Make the datum parallel with the measuring reference.
(c) Measure the lead width (shown above) from the upper surface.

Lead thicknesses c and c_1
(a) Put the package on the surface plate.
(b) Measure the lead thickness (shown above) from the side.

b_1 and c_1 may be measured before plating.

(4) Remarks

(a) b_1 and c_1 may be measured before the lead is processed. If this occurs, after processing, measure b_1 and c_1 at the position within the above specified range.

(b) The lead thickness may be measured at 8 points on the 4 corners of the package as representative values.

6.6 Soldered portion length Lp

(1) Definition

(a) Soldered portion length Lp: The distance, in the seating plane direction from a cross point (a) of a plane 0.25 mm far from and in parallel with the seating plane with an inside surface of a descending portion of the lead to the tip (b) of the lead.

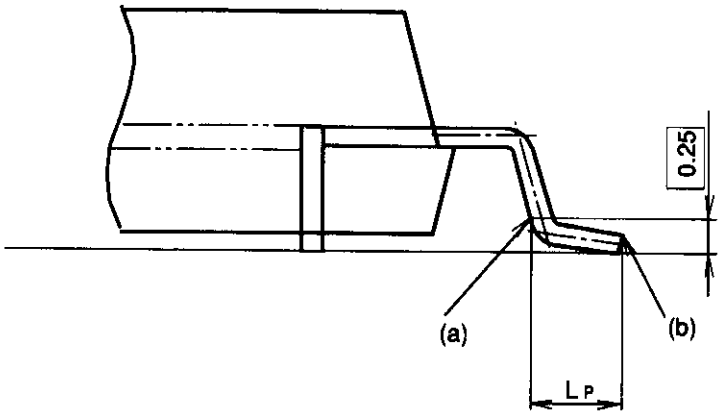

(2) Measuring instruments (or equipment) to be used

(a) Metallographic microscope: Magnifying power of 30 times and measuring accuracy of 5 μm.

(b) Projector: Magnifying power of 10 times and measuring accuracy of 10 μm.

(3) Measuring method

(a) Put the package on the surface plate.

(b) Make the datum parallel with the measuring reference.

(c) Observe the lead toward the package side (in the seating plane direction). Measure positions of points (a) and (b) in the seating plane direction.

(4) Remarks

As this measuring method can only be done from the side, the values of the leads observable from the side are allowed as representative values.

6.7 Acceptable values at center positions of leads

(1) Definition

(a) Let S, A, and B denote datum as shown in the above figures. Obtain positions of tips of leads at points of 0.1 mm inside from the tips. Obtain differences from the theoretical positions. Acceptable differences are defined as the acceptable values at center positions of leads.

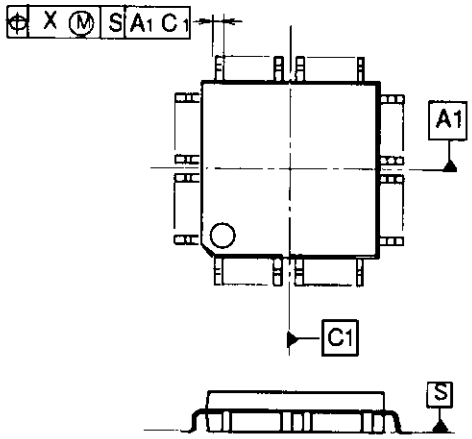

(2) Measuring instruments (or equipment) to be used

(a) Projector: Magnifying power of 10 times and measuring accuracy of 10 μm.

(b) Metallographic microscope: Magnifying power of 30 times and measuring accuracy of 5 μm.

(3) Measuring method

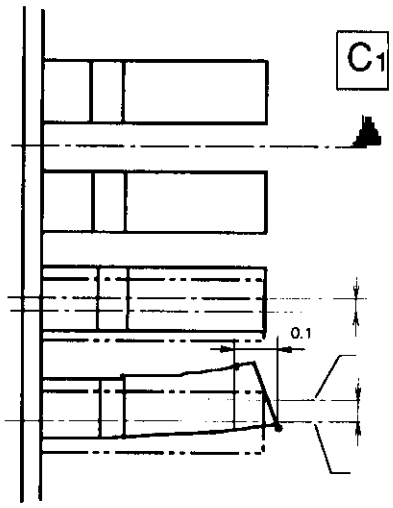

(a) Put the package on the seating plane (surface plate or virtual plane).

(b) Make the datum parallel with the measuring reference.

(c) Obtain positions of ends of leads at points of 0.1 mm inside from the tips.

(d) Obtain differences from the theoretical centers of the leads.

(e) The differences are defined as the acceptable values at center positions of leads.

(4) Quick measuring method 1

If using a manual measuring instrument, the stage of which cannot be turned, proceed as follows.

(a) Make the sides parallel with the measuring reference. Measure the center positions in reference to the center lead reference point. Obtain differences X' from the specified positions.

(b) Measure the positions of the center lead reference points of the side. Obtain corrected angle γ.

(c) Obtain the lead position accuracies X in terms of the differences X' in (1) above and the angle corrections γ in (2) above in the following arithmetic calculation.

$$X = X' - (D \text{ or } E/2 + L1 - 0.1) \times \tan\gamma$$

(5) Quick measuring method 2

The datum S, A-B, and C are used. The measuring method itself is the same as the measuring method mentioned above.

(6) Quick measuring method 3

The datum S, A-B, and C_2 defined below are used for measurement.

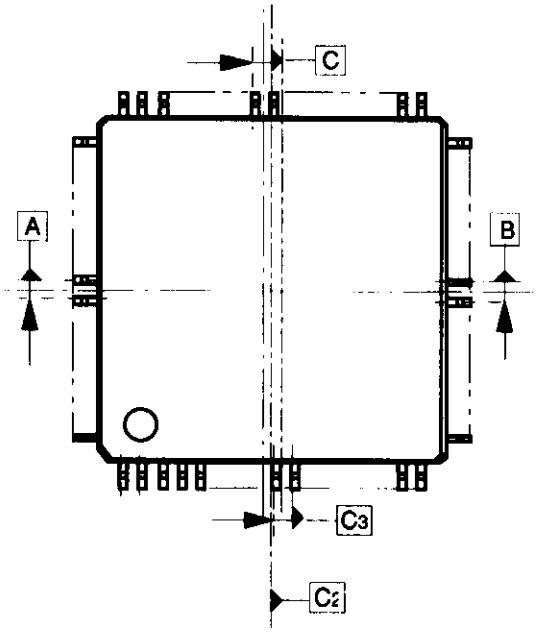

Find the center between C and center C_3, which is the opposite side of C. Define the found center as datum C_2.

6.8 Coplanarity y of lowest surfaces of leads

(1) Definition

The vertical distance from the virtual plane to the lowest point of each lead shall be referred to as "Coplanarity" of the lowest surface of lead. The distance up to the lowest point of the lead furthest from the virtual plane shall be defined as y.

Definition of Virtual Plane
Of the geometrical planes that pass the lowest points of given 3 leads, the plane on which the lowest points of all the other leads exist on the package body side shall be referred to as a virtual plane. In this case, however, the center of the package gravity must exist inside of the triangle formed with the 3 points or on one side of the triangle.
If there are plural combinations that satisfy the above conditions, a combination shall be adopted so that a larger y value may be obtained.

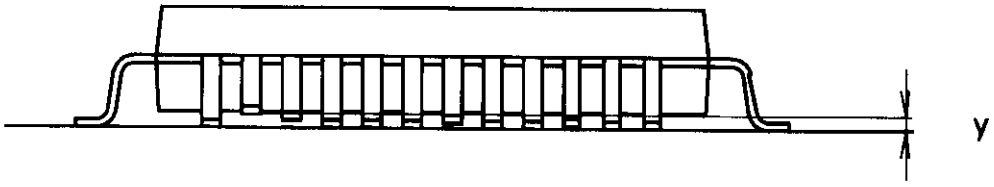

(2) Measuring instruments (or equipment) to be used

(a) Laser displacement meter: Measuring accuracy : 5 μm

(b) Metallographic microscope: Magnifying power of 30 times and measuring accuracy of 5 μm.

(3) Measuring method

(a) Calculate the virtual plate.

(b) Observe the lowest surfaces of all the leads in front toward the sides.
And measure the distance of the lowest surfaces from the seating plane in a vertical direction.

(c) The maximum value of the distances shall be defined as the Coplanarity y of the lowest lead surfaces.

(4) Quick measuring method 1

(a) Put the package on the surface plate.

(b) Check the lowest surfaces of all the leads from the front side of each side of the package to measure the vertical distance from the surface plate to the lowest surfaces.

(c) The maximum value of the distances shall be defined as the Coplanarity y of the lowest lead surfaces.

6.9 Angle θ of flat portion of lead

(1) Definition

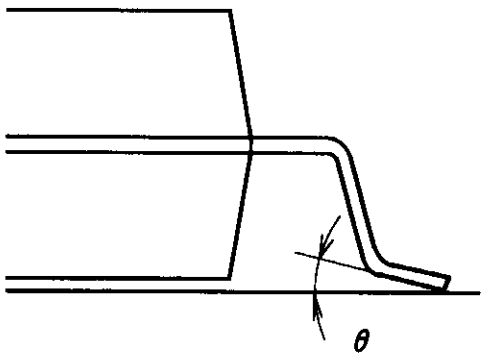

(a) An angle of flat portion of a lead of gull wing type to the seating plane (virtual plane) is defined as the angle θ of the flat portion of the lead.

(2) Reference of measuring instruments (or equipment) to be used

(a) Laser displacement meter: Measuring accuracy : 5 μm

(b) Metallographic microscope: Magnifying power of 30 times and measuring accuracy of 5 μm.

(3) Measuring method

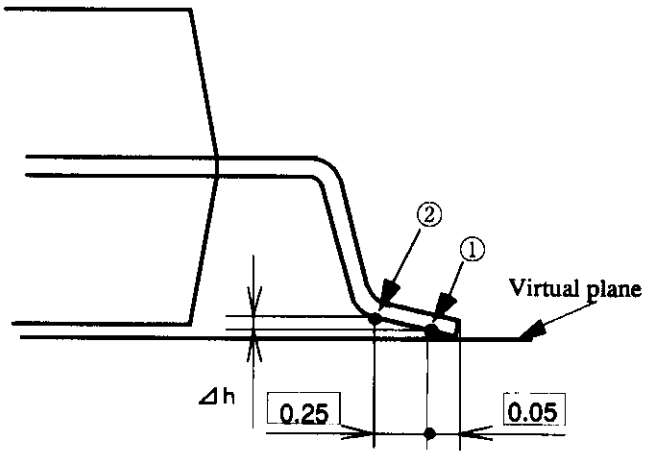

(a) Put the package on the surface plate.

(b) Measure the height at the lowest point ¨ of 0.05 mm inside from the tip of the lead.

(c) Measure the height at point ≠ of 0.25 mm inside from the lowest point ¨. Measure the difference Δh.

(d) Substitute the value for the following equation. Let the obtained value be denoted as the angle θ of flat portion of lead.

$$\theta = \tan^{-1} \frac{\Delta h}{0.25}$$

(4) Simple measuring method

Execute the above measuring method on the surface plate instead of the virtual plane.

(5) Remarks

The value of the lead observable toward the side is allowed as representative values.

Explanation

1. Object of establishment The object of establishment of this standard is to standardize the measuring method of dimensions specified in the general dimensions rules of integrated circuits of semiconductor devices.

2. Progress of discussion As to the measuring method of dimensions specified in the general dimensions rules of integrated circuits of semiconductor devices, there is no standard, and the measuring method is different between users and suppliers, and differences are generated in measured results, so that a problem is imposed. On the other hand, to respond to the recent highly densed packaging and improvement in compatibility at the time of packaging, the tolerance has been severe. As a result, differences due to different measuring methods cause a greater problem.

Therefore, the semiconductor common standard preparation WG started the standardization work of measuring method in February 1992. The practical discussion was executed by the plastic package subcommittee and fine pitch package WG and the final discussion was ended by the semiconductor common standard WG in March 1995. It will be approved, established, and issued by the semiconductor package standardization committee in place of the semiconductor package special committee in May.

The first plan was to establish general dimensions rules of integrated circuits of all semiconductor devices. However, due to a problem of time and since the rules do not specify the datum which is a reference for measurement, it was necessary to revise the rules at the same time. As a result, only the QFP to which the severest tolerance was requested and for which the revision work was executed was stipulated. Measuring methods of the other packages will be added to the rules in the timing of future revision and establishment of the rules.

For establishment of the rules, to achieve standardization of the measuring method which is the original object, the rules have been illustrated by as many diagrams as possible and expressed by sentences which are easy to understand by avoiding complicated expressions as far as possible.

In the process of discussion, complicated or difficult measuring methods appeared. Therefore, the rules approve simple methods which can be permitted on a measuring accuracy basis and approve that representative values are used for partial dimensions relating to leads.

3. Main discussion contents

3.1 Datum As to the datum, the part which is stable in shape is adopted with reference to the JEDEC standard. However, for the uniformity of the lowest surface of lead, datum for the angle of the lead flat part, and datum for lead position accuracy, different datums are adopted for the following reasons.

(1) Uniformity of the lowest surface of lead and datum for the angle of the lead flat part

As a packaging method, a method for using solder paste is often used generally. In the case of this packaging method, each package is floating in solder paste and is not affected by its own weight and the shape of each lead is almost the same as that when it is floating in the air. Therefore, the virtual plane is adopted as a datum.

When a package is put on the surface plate, a seesaw phenomenon that a different supporting lead is used whenever it is put on the surface plate due to the position of the supporting lead and the center of gravity occurs. This phenomenon also can be grasped correctly by the virtual plane, so that the virtual plane is adopted.

(2) Datum for lead position accuracy

When a fine pitch QFP is mounted on a substrate by a set manufacturer, the positions of all lead tops are detected, and the most suitable position for the substrate is obtained by the method of least squares, and then the QFP is mounted. Therefore, also as to lead guarantee, an opinion that an equivalent standard should be adopted was given. Also in actual packages, some packages may not be formed symmetrically due to shrinkage of resin or the leads on one side may be all deformed relatively in one direction from their bases. Therefore, an opinion that the leads cannot be guaranteed unless a datum which is subjected to position correction (rotation correction) as mentioned above is used was given. As a result of discussion, the definition which is stipulated in the text has been decided. As a method for obtaining the relationship between the sides, the definition which provides a result which is almost equivalent to that by the method of least squares and can be easily specified has been decided in consideration of manual measurement.

3.2 Body thickness For body thickness, a definition including a warp and swelling has been decided. As a result, it is hard to measure correctly by a micrometer which measures only locally. Therefore, a method for putting a package between plates vertically in parallel and measuring it by the micrometer has been adopted.

A method for putting a package on the surface plate and measuring it was discussed (for example, a package is put upside down and measured). However, since there is a possibility that a seesaw phenomenon is caused by a warp and swelling of a package, only a method for clamping and measuring a package has been adopted. A method using vernier calipers has been approved only as a simple method because the number of digits which can be measured is not sufficient.

3.3 Lead thickness and width As to the lead thickness and width, there are two measuring methods available, such as a method for cutting a cross section after plating and measuring material dimensions and a method for measuring in the material state (before plating). However, a package is generally ground chemically before plating, so that the values by the two methods do not coincide with each other. As a result of discussion, since the current rules stipulate the specified dimensional values of the latter, the latter measuring method has been adopted.

3.4 Tolerance of lead center position The datum to be used for the lead center position is simplified to a certain extent but it is not sufficient, so that two simple methods have been adopted. The reason of adoption is that both of them are strict as a guarantee and it can be considered that they are not questionable for a user.

3.5 Angle of lead flat part To measure the angle of the flat part of each lead, its tip is excluded to avoid effects of burr and drop. The distance between measuring points is made as long as possible so that it is kept away from the radius.

3.6 Package overhang The package overhang is a theoretical dimension which can be obtained by arithmetic and is not an object for guarantee, so that it is not specified.

4. Discussion committeeman This standard was discussed mainly by the semiconductor common standard preparation WG of of the semiconductor package special committee, the plastic package subcommittee, and the fine pitch package WG which is a lower branch thereof. The committeemen are as shown below.

<Semiconductor package special committee>
Chairman: Kazuo Kasuga, NEC
<WG on General Rules for Package Standardization>
Chief: Takao Fujitsu, Toshiba, Corp.

Member:	Makoto Tsuboi	Sanyo Electric Co., Ltd.
	Shozo Minamide	Sharp Corp.
	Yasushi Otsuka	Sony Corp.
	Morio Nakao	Texas Instruments Japan Ltd.
	Kiyoshi Ishizawa	NEC Corp.
	Yoshiyuki Hirano	NEC Corp.
	Toshinori Nishii	NEC Corp.
	Ichiro Anjoh	Hitachi, Ltd.
	Michio Sono	Fujitsu Ltd.
	Yoshinobu Kunitomo	Matsushita Electronics Co., Ltd.
	Yoshinori Egawa	Yamaichi Electronics Co., Ltd.
Special Member:		
	Hisao Kasuga	NEC Corp.
	Toshiaki Shinohara	Mitsubishi Electric Corp.

<Subcommittee on plastic package>
Chief: Ichiro Anjoh, Hitachi, Ltd.
<Fine pitch package WG>
Chief: Shozo Minamide, Sharp Corp.