Standard of Electronic Industries Association of Japan

EIAJ ED-7701

Glossary of semiconductor socket for BGA, LGA, FBGA and FLGA

Established in August, 1999

Prepared by

Technical Standardization Committee on Semiconductor Device Package

Published by

Electronic Industries Association of Japan

5-13, Nishi-shinbashi 1-chome, Minato-ku, Tokyo 105-0003, Japan

Printed in Japan

Standard of Electronic Industries Association of Japan

Glossary of semiconductor socket for BGA, LGA, FBGA and FLGA

1. Scope of Application

This standard provides for the definition of terms (herein after referred as terms) on test and burn-in sockets for BGA, LGA, FBGA and FLGA.

2. Classification

The terms are classified as follows.

(1) General
(2) Clamshell type
(3) Open top type
(4) Printed circuit board

3. Terms and Definitions

Terms and definition are as follows.

Note 1: Long terms are indicated in two lines.

Note 2: Symbol indicates dimensional symbol in drawing.

Note 3: (-) in columns of Drawing・Part and Symbol indicates no correspondence to Symbols or Drawing・Part.

(1) General

No.	Term	Definition	Symbol	Drawing·Part
101	IC socket	IC Socket means connector to electrically connect and mechanically hold IC package (quoted from Sockets for integrated circuits used electronic equipment, **EIAJ RC-5420** (1992))	-	-
102	production socket	Socket used in the production of PCB assembly for electrical equipment in order to easily replace packages.	-	-
103	test and burn-in socket	Socket mainly used for electrical characteristics test, burn-in and reliability test of package with its production process. Designed for reliable contact, durable actuation and high environmental operating temperature.	-	-
104	clamshell type socket	Socket having a style that surrounds the package with hinged base and lid.	-	**Figure 1**
105	open-top type socket	Socket having a style to load/unload package from the top opening of socket by pressing down the cover mechanism.	-	**Figure 2**

(2) Clamshell type

No.	Term	Definition	Symbol	Drawing Part
201	base	Base part to hold contacts and other socket parts and to be assembled on PCB.	-	**Figure 1,(1)**
202	lid	Part making a pair with base whose function is to hold the package.	-	**Figure 1,(2)**
203	latch	Latch to fix the cover with base at closed position.	-	**Figure 1,(3)**
204	hinge	Hinge to join base and lid.	-	**Figure 1,(4)**
205	alignment plate	Supporting part to align terminals with through holes on PCB for ease of socket terminal insertion.	-	**Figure 1,(5)**
206	alignment pin	Pin mounted on socket to define relative position of socket with PCB.		**Figure 1,(6)**
207	contact	Electrically connecting part of socket consisting of contact point with package lead and terminal portion to be soldered on PCB.	-	**Figure 1,(7)**
208	contact point	A section of the contact making connection with package.	-	**Figure 1,(8)**
209	terminal	Electrical connector protruding from socket base in order to solder on PCB. A part of the contact.	-	**Figure 1,(9)**
210	platform	Part to hold package.	-	**Figure 1,(10)**
211	pusher	Part to hold package and to maintain stable contact of package leads with socket contacts.	-	**Figure 1,(11)**
212	package guide	Guide for package established in socket to align package leads with socket contact.	-	**Figure 1,(12)**
213	mounting flange	Flange to mount socket on PCB.	-	**Figure 1,(13)**
214	socket width	Socket width excluding mounting flange.	W	**Figure 1**
215	maximum socket width	Maximum socket width including mounting flange.	W_1	**Figure 1**
216	socket length	Socket length excluding protrusion of the latch at its closed position.	L	**Figure 1**
217	maximum socket length	Maximum socket length including protrusion of the latch at its closed position.	L_1	**Figure 1**
218	latch moving distance	Distance of the latch movement beyond socket length.	L_3	**Figure 1**
219	socket height	Distance from socket mounting plane to the lid top surface at its closed position.	A	**Figure 1**
220	maximum socket height	Distance from socket mounting plane to the lid top surface including protruded section with its closed position.	A_4	**Figure 1**

No.	Term	Definition	Symbol	Drawing·Part
221	maximum height with opened lid	Maximum socket height from its mounting plane with the lid at open position including protrusions.	A_5	**Figure 1**
222	lid open angle	Angle of the lid at open position.	θ	**Figure 1**
223	base width	Width of socket base.	W_2	**Figure 1**
224	base length	Length of socket base.	L_2	**Figure 1**
225	seating plane height	Height from socket mounting surface to the platform top surface.	A_2	**Figure 1**
226	terminal length	Length from socket mounting plane to terminal tip.	A_3	**Figure 1**

(3) Open-top type

No.	Term	Definition	Symbol	Drawing·Part
301	base	Base part to hold contacts and other socket parts and to be assembled on PCB.	-	**Figure 2,(1)**
302	cover	A part to actuate the pusher and contact point of the contact.	-	**Figure 2,(2)**
303	bumper	Protective part surrounding the base.	-	**Figure 2,(3)**
304	alignment plate	Supporting part to align terminals with through holes on PCB for ease of socket terminal insertion.	-	**Figure 2,(4)**
305	alignment pin	Pin mounted on socket to define relative position of socket with PCB.	-	**Figure 2,(5)**
306	contact	Electrically connecting part of socket consisting of contact point with package lead and terminal portion to be soldered on PCB.	-	**Figure 2,(6)**
307	contact point	A section of the contact making a connection with package.	-	**Figure 2,(7)**
308	terminal	Electrical connector protruding from socket base in order to solder on PCB, a part of contact.	-	**Figure 2,(8)**
309	platform	A part to hold package. In case of the open top type socket, this functionality is likely built in main body of socket.	-	**Figure 2,(9)**
310	pusher	Part to hold package and to maintain stable contact of package leads with socket contacts.	-	**Figure 2,(10)**
311	package guide	Guide for package established in socket to align package leads with socket contact.	-	**Figure 2,(11)**
312	retainer	A part to retain package.	-	**Figure 2,(12)**

No.	Term	Definition	Symbol	Drawing·Part
313	socket width	Socket width excluding bumper and others.	W	**Figure 2**
314	maximum socket width	Maximum socket width including bumper and others.	W_1	**Figure 2**
315	socket length	Socket length excluding bumper and others.	L	**Figure 2**
316	maximum socket length	Maximum socket length including bumper and others.	L_1	**Figure 2**
317	socket height	Height of socket from its mounting plane.	A	**Figure 2**
318	end stroke height	Distance from socket mounting plane to top surface of the cover in its fully depressed position.	A_1	**Figure 2**
319	seating plane height	Distance from socket mounting plane to top surface of the platform without package.	A_2	**Figure 2**
320	terminal length	Length from socket mounting plane to terminal tip.	A_3	**Figure 2**

(4) Printed Circuit Board

No.	Term	Definition	Symbol	Drawing·Part
401	mounting hole	Holes drilled on PCB to mount socket mechanically.	-	**Figure 3,(1)**
402	alignment hole	Holes drilled on PCB to align relative position of socket and PCB.	-	**Figure 3,(2)**
403	socket mounting pattern	Description including dimension of Mounting Hole, Alignment Hole and Plated Through Hole with their relative positional dimension.	-	**Figure 3**
404	socket mounting area	Area on PCB where is required for socket mounting and operation.	-	**Figure 3,(3)**
405	socket mounting width	Width of socket mounting area.	W_p	**Figure 3**
406	socket mounting length	Length of socket mounting area.	L_p	**Figure 3**
407	maximum socket mounting width	Width of socket mounting area including mounting flange or bumper.	W_{p1}	**Figure 3**

Figure 1. Clamshell type socket

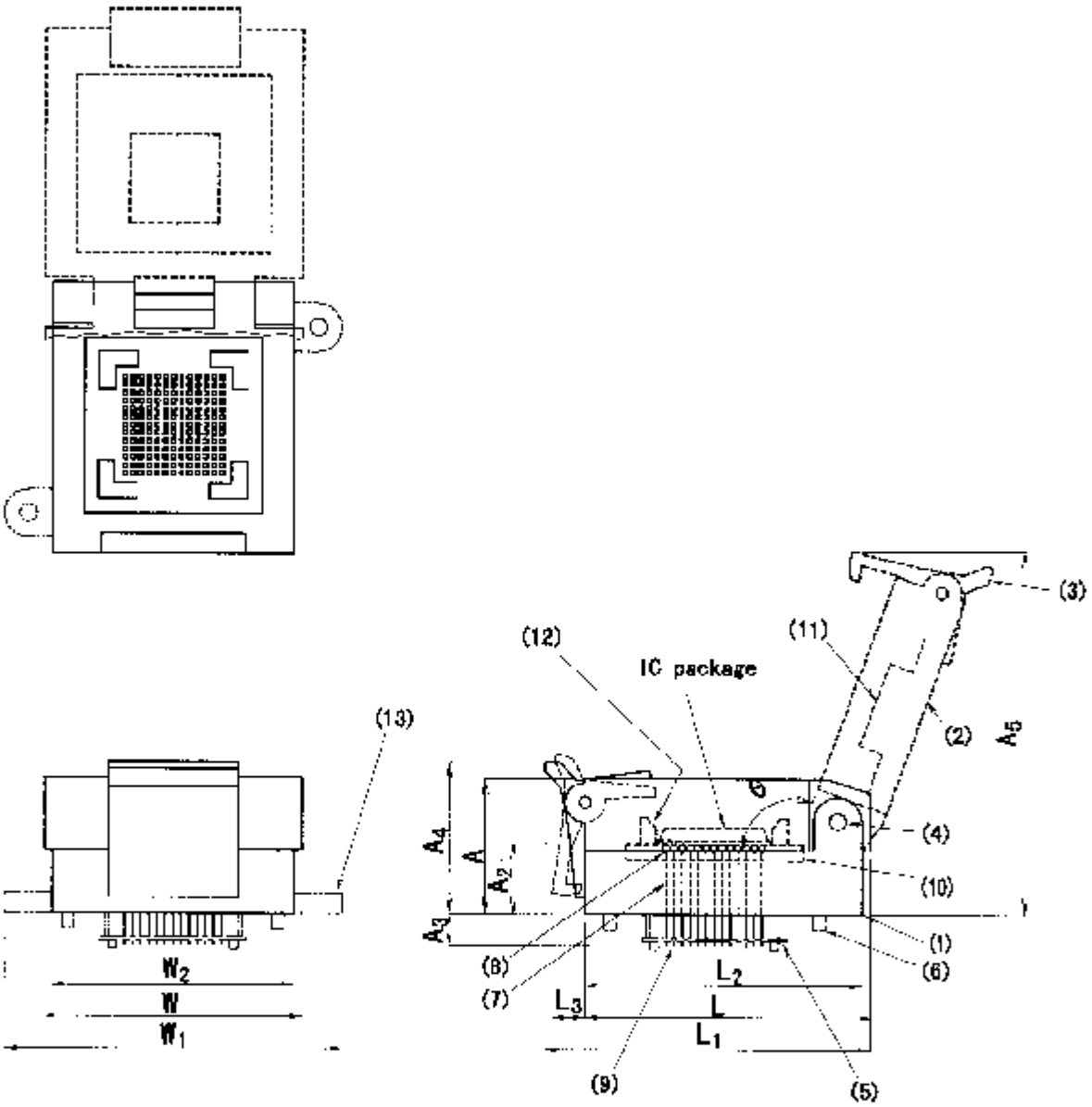

Figure 2. Open-top type socket

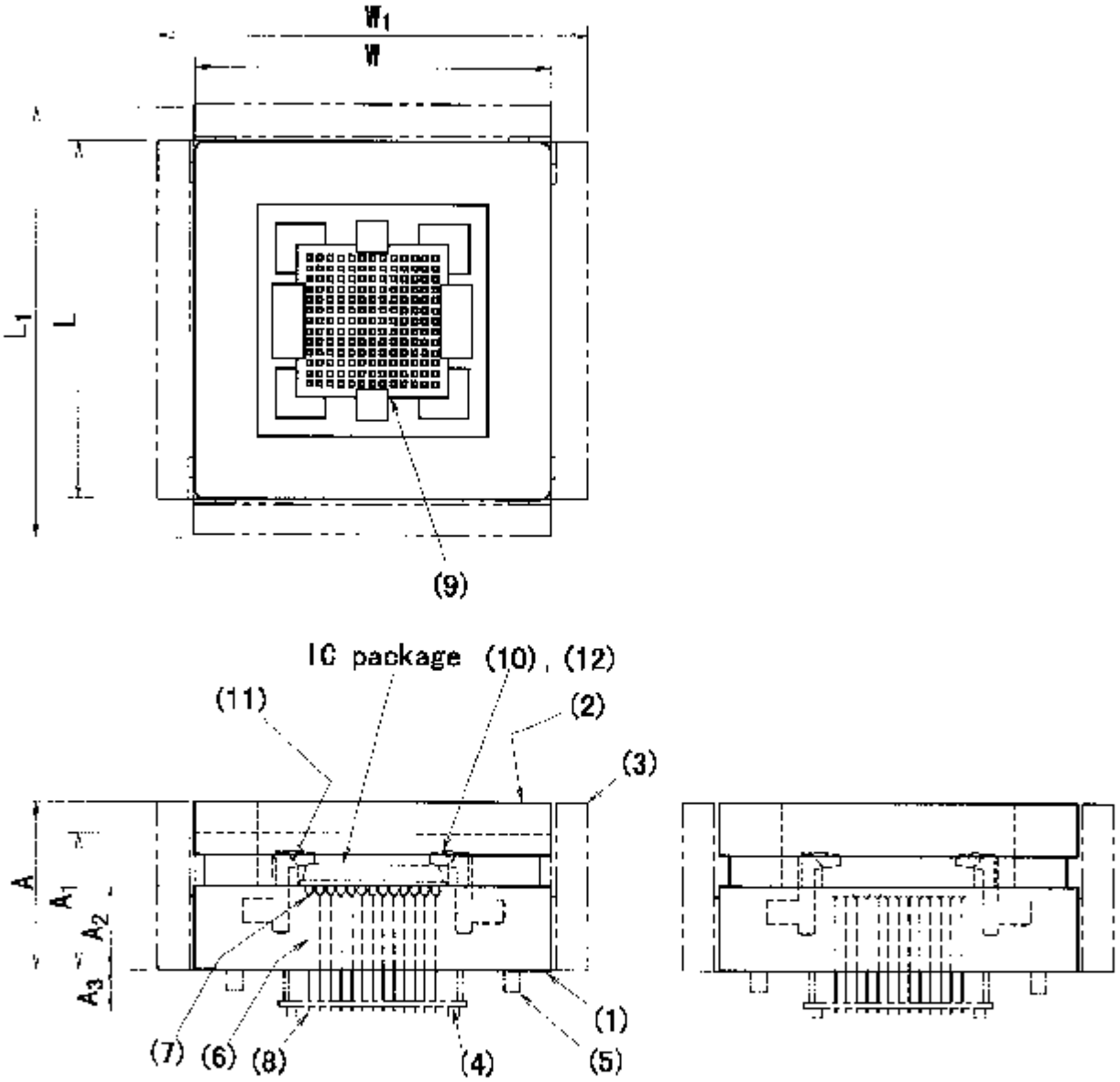

Figure 3. Socket Mounting Pattern

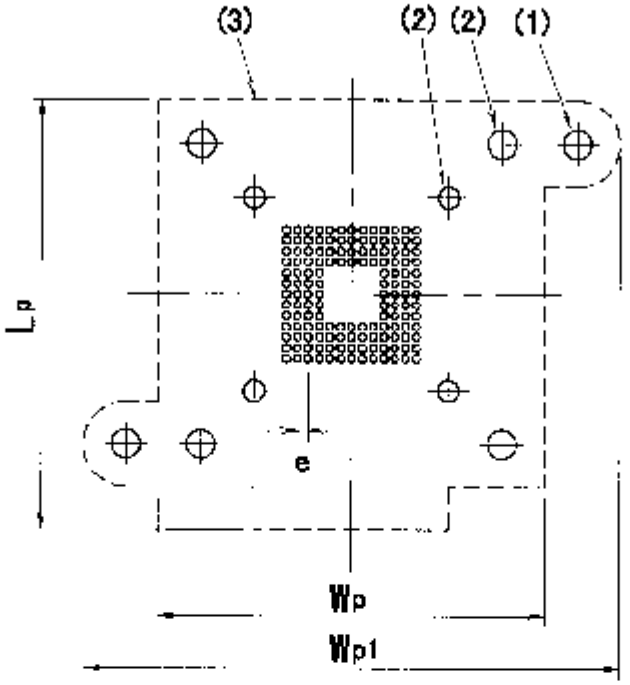

EXPLANATION

1. Purpose of Establishment

This standard intends to establish definition and unification of terminology relating to Test and Burn-in Socket for BGA, LGA, FBGA and FLGA.

2. Process of Deliberation

Standardization of semiconductor package has been actively executed by JEDEC/JC-11 in U.S.A. and by EIAJ/Technical Standardization Committee on Semiconductor Device Package in Japan. On the other hand, Test and Burn-in Socket, which is indispensable for development of package, has been developed independently by each semiconductor maker and socket maker with their own specifications and terminology. As a result a survey was implemented and a meeting for discussion was held.

Findings from the survey report showed 22 members out of 54 Technical Standardization Committee on Semiconductor Device Package members answered the questionnaire and 17 members out of 22 were positive for standardization. In the meeting held on June 26, 1997, members agreed for standardization, then establishment of Semiconductor Socket Project Group was approved by Technical Standardization Committee on Semiconductor Device Package following day.

During the course of discussion for standardization of socket by Project Group, there was a need to unify the terminology, which was used by each member with their own standard. In the beginning, terminology had been considered to be specified in the Standard Document or in the Design Guide, however, it was decided to establish an independent Standard for terminology rather than becoming a part of the design guide due to the large volume of such terminology.

It is expected this standard will improve the communication between IC socket makers and users.

3. Back Ground of Adopted Terminology

IC socket is generally classified into Production Use and Test and Burn-in Use, this standard specifies the latter category.

Test and Burn-in Socket is classified into Clam Shell Type and Open Top Type from structural viewpoint, and names and dimensions of parts for each type are explained.

In regard to dimensions, following terminology was adopted.

(a) Dimension which represents socket.

(b) Maximum dimension for packing.

(c) Base dimension for designing of printed circuit board.

(d) Maximum lid height of Clam Shell Type at open position for determination of board rack pitch.

(e) Dimension required for automatic loading and unloading.

In addition, explanation relating to the assembly of IC socket on printed circuit board is included due to the majority application being the mounting of IC sockets to PCB's. This standard unified terminology with different historical background at each maker and user, may not always match the sense of reader. Such discrepancies will be hopefully corrected in future revisions.

4. Related and Reference Standards

(1) EIAJ RC-5200 (1993) [Terms and Definitions for Connectors]

(2) EIAJ RC-5420 (1992) [Sockets for integrated circuits used electronic equipment]

5. Members of the Committee

This standard was deliberated by Semiconductor Socket Project Group of Technical Standardization Committee on Semiconductor Device Package.

The members are as shown below.

<Technical Standardization Committee on Semiconductor Device Package>

Chairman:	Shouzou Minamide	Sharp Corporation

<Semiconductor Socket Project Group>

Leader:	Kazuhiro Tashiro	Fujitsu Ltd.
Co Leader:	Shunji Abe	Yamaichi Electronics Co.,Ltd.
Member:	Shuji Inoue	Intel Corporation
	Kazumasa Sato	Wells-CTI K.K.
	Tsutomu Kashiwagi	Enplas Corporation
	Hiroaki Hirao	Samsung Japan Corporation
	Tohru Hayashi	SANYO Electric Co.,Ltd.
	Syouzou Yokoyama	Shinon Electric Industry Co.,Ltd
	Takayuki Nagumo	Sumitomo 3M Limited
	Kazuo Yazawa	Seiko Epson Corp.
	Hisataka Izawa	Sony Corporation
	Akito Yoshida	Toshiba Corporation
	Tsuneo Kobayashi	IBM Japan,Ltd.
	Masao Tohyama	Texas Instruments Japan Ltd.
	Hiroyuki Hosogi	Texas Instruments Japan Ltd.
	Kozaburo Suzuki	NEC Corporation
	Akira Kaneshige	Molex Japan Co.,Ltd.
	Usuke Enomoto	Hitachi,Ltd.
	Shigeru Kuriyama	Matsushita Electronics Corporation
	Hidekazu Iwasaki	Mitsubishi Electric Corporation
	Shinichi Nakamura	Unitechno Inc.
	Osamu Miyata	Rohm Co.,Ltd.