JEITA

Technical Report of Japan Electronics and Information Technology Industries Association

EIAJ EDR-7326A

Design guideline of integrated circuits for Plastic Small Outline Package with Heat sink (P-HSOP)

Established in December, 1999
Revised in March, 2002

Prepared by
Technical Standardization Committee on Semiconductor Device Package

Published by
Japan Electronics and Information Technology Industries Association

11, Kanda-Surugadai 3-chome, Chiyoda-ku, Tokyo 101-0062, Japan
Printed in Japan

Translation without guarantee in the event of any doubt arising, the original standard in Japanese is to be evidence.

JEITA standards are established independently to any existing patents on the products, materials or processes they cover.
JEITA assumes absolutely no responsibility toward parties applying these standards or toward patent owners.

EIAJ EDR-7326A

Technical report of Japan Electronics and Information Technology Industries Association

Design guideline of integrated circuits for Plastic Small Outline Package with Heat sink (P-HSOP)

1. Scope of Application

This technical report regulated outline drawings and dimensions of the Plastic Small Outline Package with Heat Sink (hereinafter referred to as P-HSOP) which among the packages classified as form B in the **EIAJ ED-7300** [Recommended practice on Standard for the preparation of outline drawings of semiconductor packages]

Note: This technical report is revised and corresponds to **EIAJ EDR-7314A** [Design guideline of integrated circuits for (P-SSOP)] established in January 2002. The other relation standards are shown below.

EIAJ ED-7311-21 [Standard of integrated circuits package (P-HSOP)], established in March 2002

EIAJ ED-7311-20 [Standard of integrated circuits package (P-SSOP)], established in January 2002

EIAJ EDR-7320 [Design guideline of integrated circuits for (P-SOP)], established in December 1998

EIAJ ED-7311-19 [Standard of integrated circuits package (P-SOP)], established in January 2002

2. Definition of the Technical Terms

The definition of the technical terms used in this technical report is in conformity with **EIAJ ED-7300**, and the definition of technical terms appearing a new are given within the text of this standard.

3. BACKGROUND

Recently, Increasingly electronic appliance become smaller and thinner, so It corresponds to smaller and thinner, also has radiation effect which P-HSOP demand is increasing.on such background it is, P-HSOP was applied terminal straight pitch $\boxed{e}$ is 1.27mm (50mil) which Plastic Small Outline Package (herein after referred to as P-SOP) first. And after that, It is applied Terminal straight pitch $\boxed{e}$ is 1.00mm or less which Plastic Shrink Small Outline Package (herein after referred to as P-SSOP), it also became used of TSSOP, VSSOP. This standard intended to standardize the outer dimensions of P-HSOP and ensure compatibility between products as far as possible for standardization.

4. Definition of P-SSOP

P-HSOP is defined as Form B with L terminal in the item 6, “Outline classification of shapes of semiconductor package“ at the **EIAJ ED-7300**, and a package with formed terminals led out of longer side of itself in two directions, whose terminal pitch $\boxed{e}$ is 1.27mm or less, are flat toward the outside of

the package body for mounting on print circuits board surface, (gull wing shape lead) and the structure that the part of the lead line becomes a radiation fin shape, and the structure that a heat sink was exposed in the part in the surface of the package mold body.

5. Numbering of Terminals

Numbering of terminals complies with the **EIAJ ED-7300**.

6. Nominal Dimensions

Package width x Package length(Symbol : $\boxed{E}$ X $\boxed{D}$) is applied to Nominal Dimensions.

However as the exception, old nominal dimensions is possible to use places (side by side) and it writes which Package width (Symbol : E).

7. REFERENCE CHARACTERS AND DRAWING

7.1 Outline Drawing

Figure 1 (Type A, Top side heatsink)

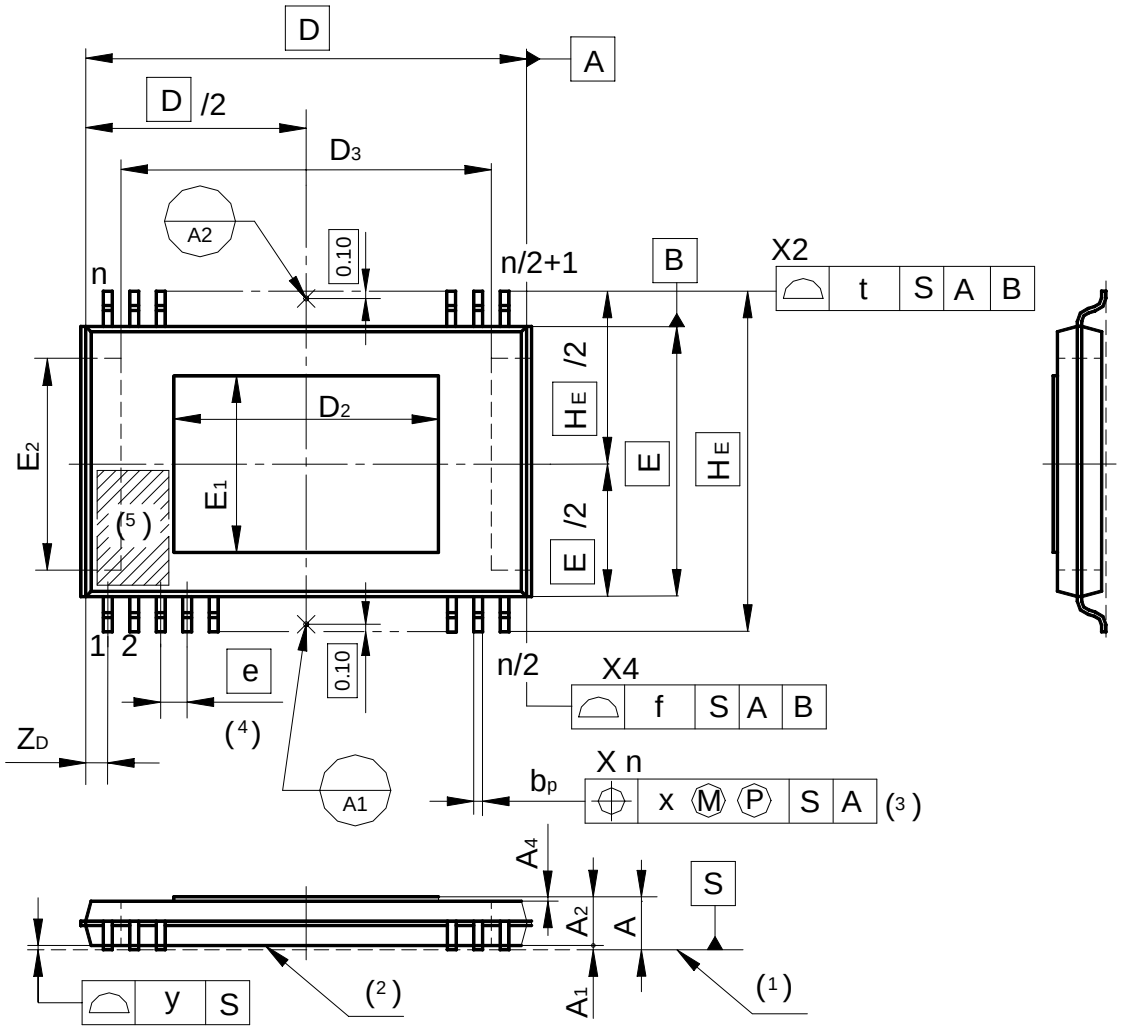

EIAJ EDR-7326A

Figure 1 (Type A, Bottom side heat sihk)

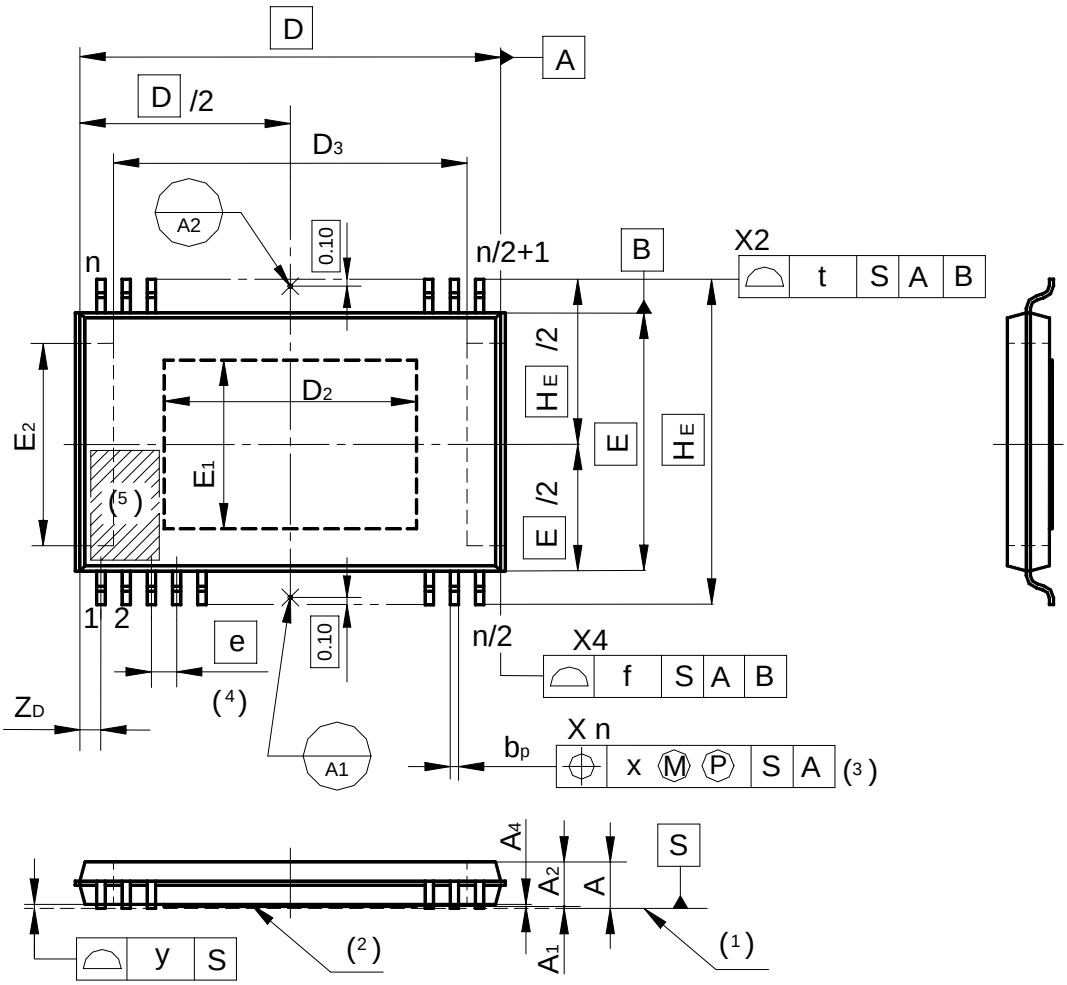

Figure 2 (Type B)

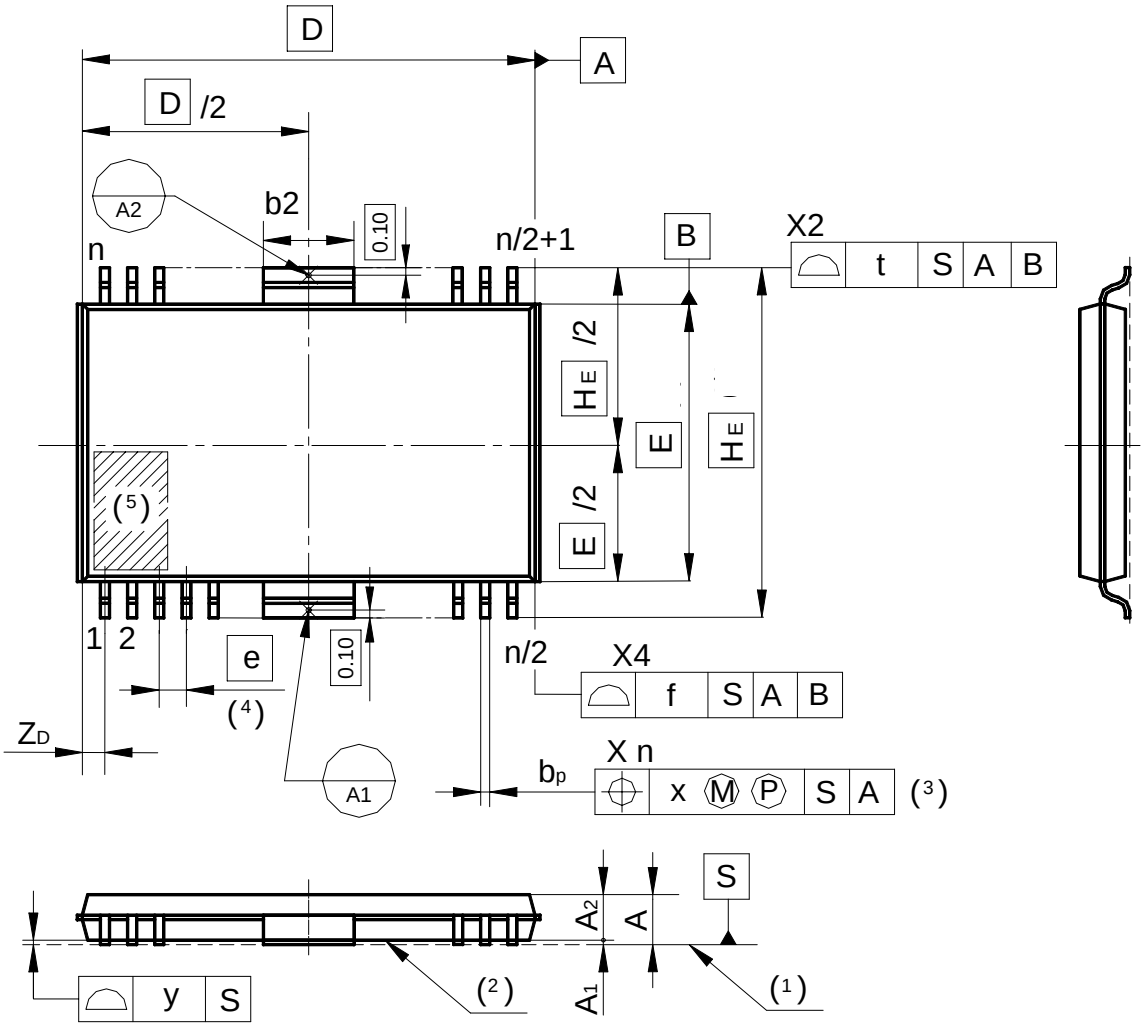

Figure 3 Detail area of datum A ([9])

Type A

For even number of terminals on a package side

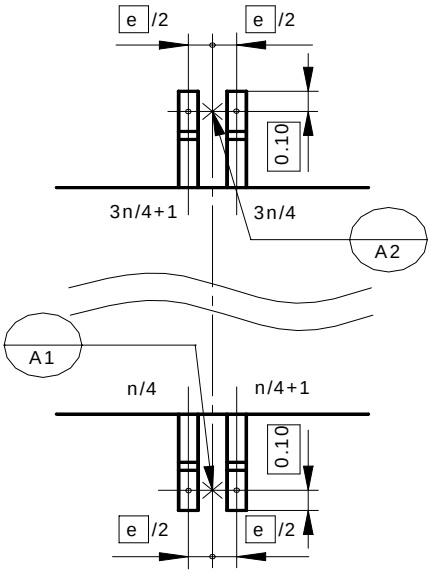

For odd number of terminals on a package side

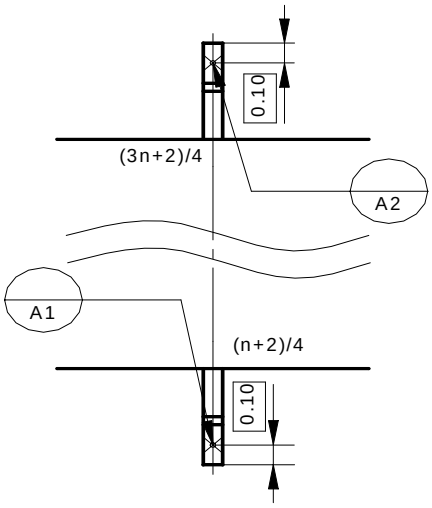

Type B

For even number of terminals on a package side

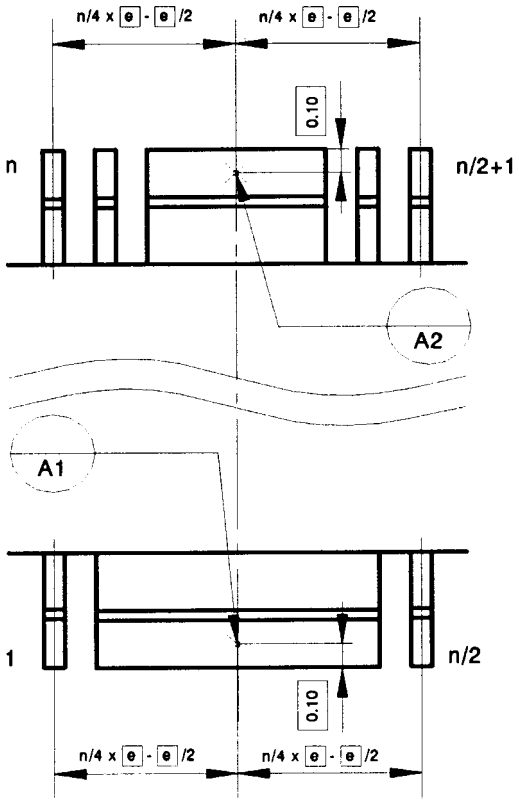

For odd number of terminals on a package side

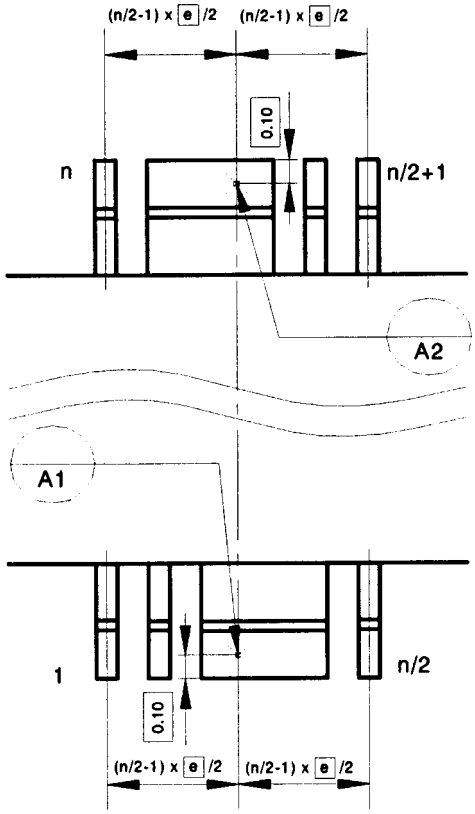

Figure 4 Detail of terminal, terminal cross section

Type A

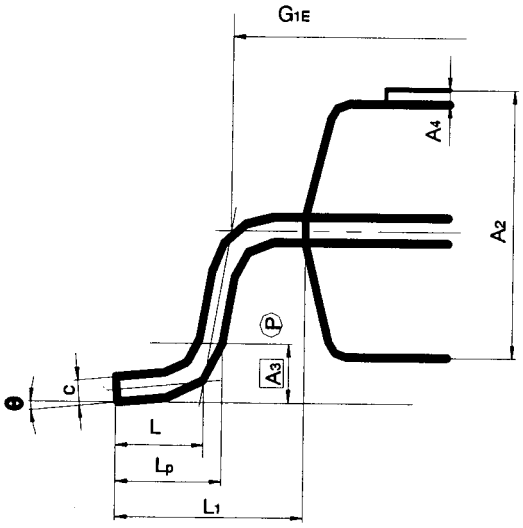

TOPSIDE HEATSHIK

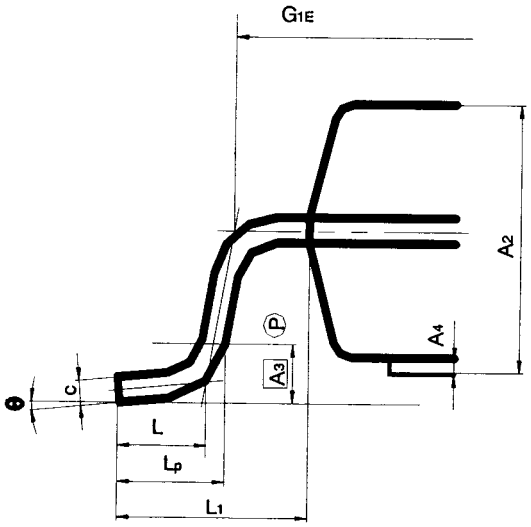

BOTTOMSIDE HEATSHIK

Type B

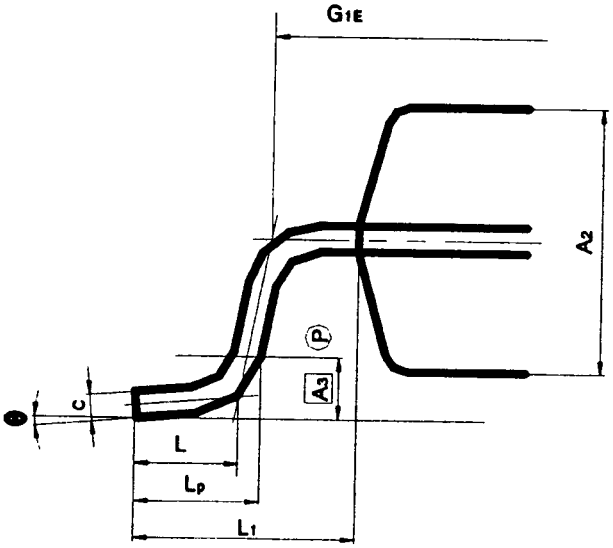

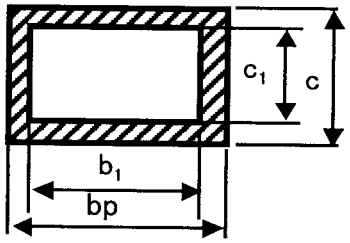

Terminal cross section ([6])

Notes:

(1) The mounting surface, with which a package is in contact.

(2) The base surface, which is in parallel with the mounting surface and links the lowest point, except the stand-off.

(3) The maximum mounting conditions apply to the positional tolerance of the terminals.
(Refer to **ISO 2692/JIS B 0023**.)

(4) Specifies the true geometric position of the terminal axis.

(5) Shows the allowable position of the Index mark area, which is based on the IEC standard and basically 1/16 with package body size, however in case of small package body size, it is less than 1/4 with package body size, It must be included in the shaded area entirely.

(6) The dimensions of the terminal section apply to the terminal region ranges of 0.10mm and 0.25mm from the end of a terminal.

(7) Resin burrs and gate remains of the package sides with no terminals are max.0.15mm per side.

(8) Resin burrs of the terminal sides are max.0.25mm per side.

(9) In case of the oppsite heatsink terminal unbalance position, an object terminal of heatsink side is base terminal, which must not datum side offcenter.

(10) The Heat sink mounting width (E_2) and The Heat sink mounting length (D_3) are applicable exclusively to the TypeB outline drawing.

(11) Definition of Heat sink

TypeA: Heatsink is exposed at the top or bottom side of the package after molded.

TypeB: Heatsink is an extension of the die pad section, and it is arranged at the lead rows at both sides.

7.2 PATTERN OF TERMINAL AREAS

Pattern of terminal areas can exist is shown **Figure 5** as reference for the foot print design.

Figure 5

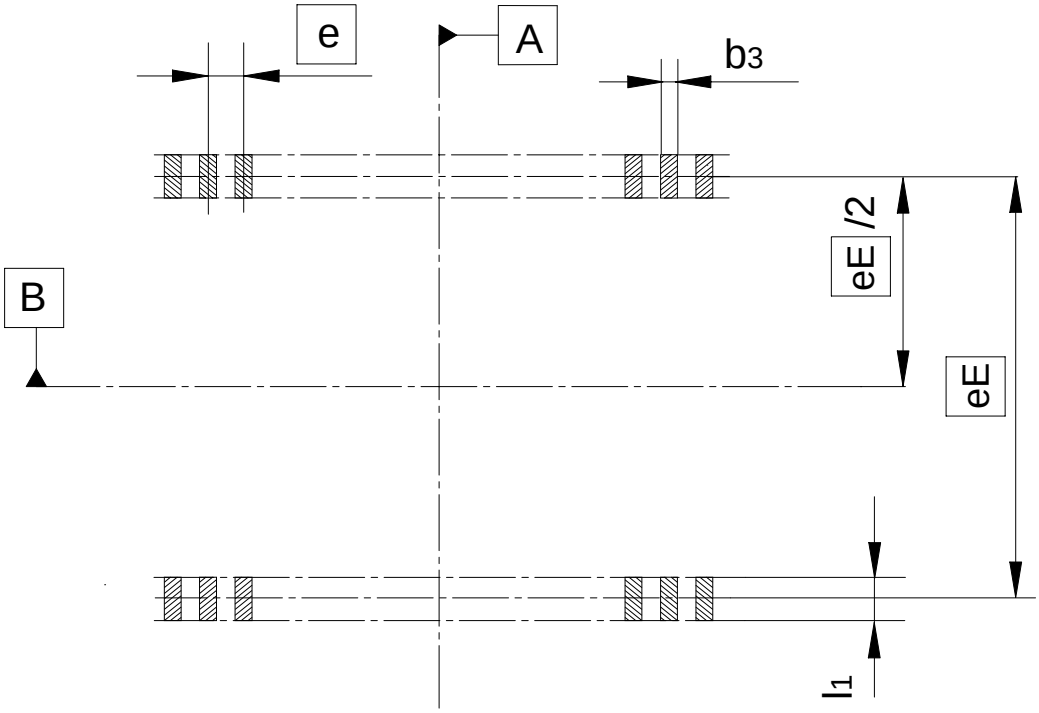

l1max=Lpmax+t

b3max=bpmax+X

eE = H_E -Lpnom

8. Outer Dimension

Table 1 below shows the standard dimensions. Combinations of the standard dimensions shown below allow a number of package variations. If a package is newly designed, their dimensions shall be selected in the **8.3 Table 2**. Number of terminal list.

8.1 GROUP 1

Table 1

Unit: mm

Description	Reference symbol	Standards	Recommended	Remarks
Nominal dimensions	E×D	Package width(E) × Package length(D) is applied to Nominal Dimensions. However as the exception, old nominal dimensions is possible to use places (side by side) and it writes which Package width (Symbol : E). Old nominal dimensions E Group1: 0020, 0030, 0044, 0056, 0061, (0080), (0099) Group2: 0300, 0350, 0400 Group3: 0115, 0130, 0145, 0160	Old nominal dimensions which Group 1 (0080), (0099) is non-recommendation.	(1) Old nominal dimensions which Group 1, 3 are the numbers without decimal points (2) Group 2 of numerical value are from mil systems.
Package width	E	E Group1: 2.00, 3.00, 4.40, 5.60, 6.10, (8.00), (9.90) Group2: 7.62, 8.89, 10.16 Group3: 11.50, 13.00, 14.50, 16.00	Group1 (8.00), (9.90) is non-recommendation.	(1) Mismatch of the upper and lower mold and gate remains and resin burrs are not included. (2) Spec of resin burrs and gate remains are expressed in notes of reference characters and drawings, ([7]), ([8]) . (3) It is recomm- ended that the upper and lower cavities are equal size. If they are different, the larger dimension shall be regarded as E. (4) Combination of E and D must be selected from the same Group (1 or 2 or 3) of each list. (5) Group 2 is same range of TSOP(2)

Table1 (continued)

Unit: mm

Description	Reference symbol	Standards	Recommended	Remarks
Package length	D	D Group1 / Group2 / Group3 2.00 3.00 3.60 5.00 6.50 7.80 9.70 / 10.79 11.00 / 12.06 12.50 / 13.33 / 13.25 14.00 / 14.60 / 14.50 (15.80) / 15.87 / 15.75 (17.00) / 17.14 / 17.00 (18.50) / 18.41 / 18.25 (20.80) / 19.68 / 19.50 20.95 / 20.75 22.22 / 22.00 23.49 / 23.25 24.76 / 24.50 26.03 / 25.75 27.30 / 27.00 28.57 / 28.25 29.50 30.75	Group1 (15.80) (17.00) (18.50) (20.80) is non-recommendation.	(1) Mismatch of the upper and lower mold and gate remains and resin burrs are not included. (2)Spec of resin burrs and gate remains are expressed in notes of reference characters and drawings, **([7]), ([8])** . (3) It is recommended that the upper and lower cavities are equal size. If they are different, the larger dimension shall be regarded as D. (4)Combination of E and D must be selected from the same Group (1or2or3) of each list. (5)Group2 is same range of TSOP(2)
Tolerance of package lateral profile	f	(1) The tolerance of package lateral profile shall be specified in the outline drawing. f S A B (2) Reference symbol f shall be replaced as below. D ≤ 14.00, f = 0.10 D > 14.00, f = 0.20	-	S and A and B is datum.
Overall width	H_E	$H_E = E + 2xL_1$	-	H_E -Lpnom= eE

Table1 (continued)

Unit: mm

<table>
<tr><th>Description</th><th>Reference symbol</th><th>Standards</th><th>Recommended</th><th>Remarks</th></tr>
<tr><td>Package height</td><td>A_2</td><td><table><tr><th></th><th>A_2min</th><th>A_2nom</th><th>A_2max</th></tr><tr><td>Group1</td><td>0.55</td><td>0.60</td><td>0.65</td></tr><tr><td></td><td>0.75</td><td>0.80</td><td>0.85</td></tr><tr><td></td><td>0.95</td><td>1.00</td><td>1.05</td></tr><tr><td></td><td>1.10</td><td>1.20</td><td>1.30</td></tr><tr><td></td><td>1.40</td><td>1.50</td><td>1.60</td></tr><tr><td></td><td>1.60</td><td>1.70</td><td>1.80</td></tr><tr><td>Group2</td><td>1.30</td><td>1.40</td><td>1.50</td></tr><tr><td>Group3</td><td>1.30</td><td>1.40</td><td>1.50</td></tr><tr><td></td><td>2.50</td><td>2.70</td><td>2.90</td></tr></table></td><td>–</td><td>(1) Include package warp age.
(2) It must be selected from the same Group (1, 2, 3) of E/D.</td></tr>
<tr><td>Seated height</td><td>A</td><td><table><tr><th></th><th>Amax</th><th>A_2nom</th></tr><tr><td>Group1</td><td>0.80</td><td>0.60</td></tr><tr><td></td><td>1.00</td><td>0.80</td></tr><tr><td></td><td>1.20</td><td>1.00</td></tr><tr><td></td><td>1.45</td><td>1.20</td></tr><tr><td></td><td>1.75</td><td>1.50</td></tr><tr><td></td><td>1.95</td><td>1.70</td></tr><tr><td>Group2</td><td>1.65</td><td>1.40</td></tr><tr><td>Group3</td><td>1.65</td><td>1.40</td></tr><tr><td></td><td>3.05</td><td>2.70</td></tr></table></td><td>–</td><td>(1) Include package warp age.
(2) It must be selected from the same Group (1, 2, 3) of E/D.
(3) Especially, it shows HSSOP, which is the thin-seated height by the following name.
<table><tr><th>name</th><th>Amax</th><th>A_2nom</th></tr><tr><td>HWSSOP</td><td>0.80</td><td>0.60</td></tr><tr><td>HVSSOP</td><td>1.00</td><td>0.80</td></tr><tr><td>HTSSOP</td><td>1.20</td><td>1.00</td></tr><tr><td>HLSSOP</td><td>1.70</td><td>1.40</td></tr></table></td></tr>
<tr><td>Stand-off height</td><td>A_1</td><td><table><tr><th>A_1min</th><th>A_1nom</th><th>A_1max</th></tr><tr><td>0.05</td><td>0.10</td><td>0.15</td></tr></table>• Only Type A (Bottomside heatsink) is assumed tobe
$A_{1min} = 0$</td><td><table><tr><th>Amax</th><th>A_1max</th></tr><tr><td>0.80</td><td rowspan="2">0.10</td></tr><tr><td>1.00</td></tr></table></td><td></td></tr>
<tr><td>Standard height of soldered points</td><td>$\boxed{A_3}$</td><td>$\boxed{A_3}$ = 0.25</td><td>–</td><td></td></tr>
<tr><td>Height of heat sink</td><td>A_4</td><td><table><tr><th>A_4min</th><th>A_4max</th></tr><tr><td>0</td><td>0.15</td></tr></table></td><td>–</td><td>Type A package outline only</td></tr>
</table>

Table 1 (continued)

Unit: mm

Description	Reference symbol	Standards	Recommen-ded	Remarks
Length of soldered part	Lp	Lp Group 1: min=0.15 nom=0.30 max=0.50 In case of L=0.30, L_1=0.50 Group 2: min=0.45 nom=0.60 max=0.75 In case of L=0.50 L_1=1.00 Group 3: min=0.73 nom=0.88 max=1.03 In case of L=0.80 L_1=1.60; min=1.04 nom=1.20 max=1.34 In case of L=1.20 L_1=2.20	–	(1) It must be selected from the same Group (1, 2, 3) of E/D. (2) It applies the following Lp value below E=3.0mm , Group1. Lpmin=0.15 Lpnom=0.30 Lpmax=0.50 In case of L=0.30, L_1=0.50
Angle of terminal flat portions	θ	θmin: 0°; θnom: 3°; θmax: 8°	–	
Terminal pitch	e	e: 1.27 1.00 0.80 0.65 0.50 0.40 0.30	–	(1) In case of e =1.27,P-HSOP (2) In case of e =1.00,P-HSSOP
Tolerance of terminal center position	x	(1) Tolerance of terminal center position shall be specified in the outline drawing. ⊕ x Ⓜ Ⓟ S A (2) Reference symbol x shall be replaced as below.	–	(1) M means the concept of the maximum material condition (MMC) and it shall be applied. (2) P is Means projected tolerance zone, it shows the range of the measurement object which guaranteeing the height of A_3

e	x
1.27	0.20
1.00	0.20
0.80	0.16
0.65	0.13
0.50	0.08
0.40	0.07
0.30	0.06

Table 1 (continued)

Unit: mm

Description	Reference symbol	Standards	Recommended	Remarks
Terminal width	b_p	e / $b_p$min / $b_p$max 1.27 / 0.34 / 0.50 1.00 / 0.34 / 0.50 0.80 / 0.24 / 0.40 0.65 / 0.17 / 0.32 0.50 / 0.17 / 0.27 0.40 / 0.13 / 0.23 0.30 / 0.09 / 0.18	(1) Solder plating e / $b_p$nom 1.27 / 0.42 1.00 / 0.42 0.80 / 0.32 0.65 / 0.24 0.50 / 0.22 0.40 / 0.18 0.30 / 0.14 (2) Palladium plating e / $b_p$nom 1.27 / 0.40 1.00 / 0.40 0.80 / 0.30 0.65 / 0.22 0.50 / 0.20 0.40 / 0.16 0.30 / 0.12	(1) b_p and c denote the terminal width and thickness with plating. b_1 and c_1 denote the terminal width and thickness before plating. (2) b_p, b_1, c, c_1 apply to the ranges of 0.10 - 0.25 from the tip of a terminal. (3) The standard value of b_p,c, Solder plating, the standard thickness of solder layer shall be, [0.010 +0.010/-0.005] As palladium plating, it is very thin, so terminal width and thickness is, $b_{pnom}=b_{1mom}$ $c_{nom}=c_{1nom}$
	b_1	e / $b_1$min / $b_1$nom / $b_1$max 1.27 / 0.34 / 0.40 / 0.46 1.00 / 0.34 / 0.40 / 0.46 0.80 / 0.24 / 0.30 / 0.36 0.65 / 0.17 / 0.22 / 0.28 0.50 / 0.17 / 0.20 / 0.23 0.40 / 0.13 / 0.16 / 0.19 0.30 / 0.09 / 0.12 / 0.15	-	
Terminal thickness	c	$c_1$nom / cmin / cmax 0.40 / 0.39 / 0.45 0.30 / 0.29 / 0.35 0.25 / 0.24 / 0.30 0.20 / 0.19 / 0.25 0.15 / 0.14 / 0.20 0.125 / 0.115 / 0.17	(1) Solder plating $c_1$nom / cnom 0.40 / 0.42 0.30 / 0.32 0.25 / 0.27 0.20 / 0.22 0.15 / 0.17 0.125 / 0.145 (2) Palladium plating $c_1$nom / cnom 0.40 / 0.40 0.30 / 0.30 0.25 / 0.25 0.20 / 0.20 0.15 / 0.15 0.125 / 0.125	
	c_1	$c_1$min / $c_1$nom / $c_1$max 0.39 / 0.40 / 0.41 0.29 / 0.30 / 0.31 0.24 / 0.25 / 0.26 0.19 / 0.20 / 0.21 0.14 / 0.15 / 0.16 0.115 / 0.125 / 0.135		

Table 1 (continued)

Unit: mm

Description	Reference symbol	Standards	Recommended	Remarks
Co planarity	y	(1) The co planarity shall be specified in the outline drawing. ⌓ | y | S (2) Reference symbol y shall be replaced with any of the values shown below. e / y 1.27 / 0.10 1.00 / 0.10 0.80 / 0.10 0.65 / 0.10 0.50 / 0.08 0.40 / 0.08 0.30 / 0.05	-	
Positional tolerance of terminal tips	t	(1) The tolerance of the terminal tips shall be specified in the outline drawing. ⌓ | t | S | A B (2) Reference symbol t shall be replaced with any of the values shown below. t = 0.20	-	
Number of terminal	n	The numbers of terminals are determined as follows. (1) Group1 (See **Table 2**) ▪ D ≤ 14.00 The number of terminals obtained when $Z_D \geq 0.10 + b_{1nom}/2$ ▪ D > 14.00 The number of terminals obtained when $Z_D \geq 0.20 + b_{1nom}/2$ (2) Group2, 3 (See **Table 3, 4**) ▪ e = 1.00, 0.80, 0.65, 0.50 The number of terminals obtained when $Z_D \geq 0.50$ ▪ e=0.40, 0.30 The number of terminals obtained when $Z_D \geq 0.20+b_{1nom}/2$	The recommended number of terminals in a package length for each terminal pitch is the maximum number that shall meet the rule given in the standards column, except number of terminals in Group1, D=12.50, D=14.00 of e=0.40. (See in **Table 2** and **note**)	However, terminal number n must not overlap in different package length in the same terminal pitch. And it must not overlap in different terminal pitch in the same package length.

8.2 Group 2

Table 1 (continued)

Unit: mm

Description	Reference symbol	Standards	Recommended	Remarks
Width between first bent part of terminal	G_{1E}	L_1 / G_{1E} 0.50 / E + 0.30 1.00 / E + 0.80 1.60 / E + 1.40 2.20 / E + 1.80	–	(1) Nominal dimension for test socket and tray design.
Package overhang	Z_D	$Z_D = (D - (n/2-1) \times e)/2$	–	
Length of flat part of terminal	L	L_1/ L / A_2nom Group1: L_1=0.50/ L=0.30 — 0.60, 0.80, 1.00, 1.20, 1.50 Group1: L_1=1.00/ L=0.50 — 1.70 Group2: 1.40 Group3: 1.40 L_1=1.60/ L=0.80, L_1=2.20/ L=1.20 — 2.70	–	Value of L and L_1 must be selected in the same Group (1, 2, 3) of E/D.
Terminal length	L_1			
Terminal inline interval	eE	eE = H_E – Lpnom (1)In case of SOP and SSOP and TSOP(2), eE = e_1 (2) In case of TSOP(1) , eD = e_1	–	

8.2 Group 2

Table1 (continued)

Unit: mm

Description	Reference symbol	Standards	Recommended	Remarks
Terminal width of heat sink	b_2	$b_{2\ nom} = \boxed{e} \times m_2 + b_{p\ nom}$	-	Applicable exclusively to the Type B outline drawing. It makes m_2 an integer, and m_2 =1 ~ (n/2-4).
Heat sink surface length	D_2	$D_{2\ max} = \boxed{D} \times 0.90$	-	Applicable exclusively to the Type A outline drawing.
Mounting length of heat fan	D_3	$D_3 = \boxed{D} \times 0.95 \pm 0.10$ It makes nominal value to have rounded the 2nd digit decimal points with computation value.	-	Applicable exclusively to the Type A outline drawing. (OPTION)
Heat sink surface width	E_1	$E_{1\ max} = \boxed{E} \times 0.90$	-	Applicable exclusively to the Type A outline drawing.
Mounting width of heat fan	E_2	$E_2 = \boxed{E} \times 0.55 \pm 0.10$ It makes nominal value to have rounded the 2nd digit decimal points with computation value.	-	Applicable exclusively to the Type A outline drawing. (OPTION)

8.3 Number of terminal list

Table 2 Number of terminal list (Group1)

e	1.27		1.00		0.80		0.65		0.50		0.40		0.30	
D	n	Z_D	n	Z_D	n	Z_D	n	Z_D	n	Z_D	n	Z_D	n	Z_D
2.00									* 8	0.25	* 10	0.20	* 12	0.25
3.00							* 8	0.525	10	0.50	* 14	0.30	16	0.45
									* 12	0.25			* 18	0.30
3.60					* 8	0.60	* 10	0.50	* 14	0.30	16	0.40	20	0.45
											* 18	0.20	* 22	0.30
5.00	* 8	0.595	8	1.00	* 12	0.50	14	0.55	18	0.50	22	0.50	26	0.70
			* 10	0.50			* 16	0.225	* 20	0.25	* 24	0.33	28	0.55
													30	0.40
													* 32	0.25
6.50	* 10	0.71	* 12	0.75	14	0.55	18	0.65	22	0.75	28	0.65	34	0.85
					* 16	0.225	* 20	0.325	24	0.50	30	0.45	36	0.70
									* 26	0.25	* 32	0.25	38	0.55
													40	0.40
													* 42	0.25
7.80	* 12	0.725	14	0.90	18	0.65	22	0.65	28	0.65	34	0.70	44	0.75
			* 16	0.40	* 20	0.325	* 24	0.325	* 30	0.40	36	0.50	46	0.60
											* 38	0.30	48	0.45
													* 50	0.30
9.70	* 16	0.405	18	0.85	22	0.65	26	0.95	32	1.10	40	1.05	52	1.10
			* 20	0.35	* 24	0.325	28	0.625	34	0.85	42	0.85	54	0.95
							* 30	0.30	36	0.60	44	0.65	56	0.80
									* 38	0.35	46	0.45	58	0.65
											* 48	0.25	60	0.50
													62	0.35
													* 64	0.20
11.00	* 18	0.42	* 22	0.50	26	0.70	32	0.625	40	0.75	50	0.70	66	0.70
					* 28	0.30	* 34	0.30	42	0.50	52	0.50	68	0.55
									* 44	0.25	* 54	0.30	70	0.40
													* 72	0.25
12.50	* 20	0.535	* 24	0.75	30	0.65	36	0.725	46	0.75	56	0.85	74	0.82
					* 32	0.25	* 38	0.40	48	0.50	58	0.65	76	0.70
									* 50	0.25	* 60	0.45	78	0.55
													80	0.40
													* 82	0.25
14.00	* 22	0.65	26	1.00	* 34	0.60	40	0.825	52	0.75	62	1.00	84	0.85
			* 28	0.50			* 42	0.50	54	0.50	64	0.80	86	0.70
									* 56	0.25	66	0.60	88	0.55
											* 68	0.40	90	0.40
													* 92	0.20
(15.80)	* 24	0.915	28	1.40	36	1.10	44	1.075	58	0.90	70	1.10	94	1.00
			30	0.90	* 38	0.70	46	0.75	60	0.65	72	0.90	96	0.85
			* 32	0.40			* 48	0.425	* 62	0.40	74	0.70	98	0.70
											76	0.50	100	0.55
											* 78	0.30	*102	0.40
(17.00)	* 26	0.88	* 34	0.50	40	0.90	50	0.70	64	0.75	78	0.90	104	0.85
					* 42	0.50	* 52	0.375	* 66	0.50	80	0.70	106	0.70
											82	0.50	108	0.55
											* 84	0.30	*110	0.40
(18.50)	* 28	0.995	* 36	0.75	44	0.85	54	0.80	68	1.00	84	1.05	112	1.00
					* 46	0.45	* 56	0.475	70	0.75	86	0.85	114	0.85
									* 72	0.50	88	0.65	116	0.70
											* 90	0.45	118	0.55
													*120	0.40
(20.80)	30	1.51	38	1.40	48	1.20	58	1.30	74	1.40	90	1.60		
	* 32	0.875	40	0.90	50	0.80	60	0.98	76	1.15	92	1.40		
			* 42	0.40	* 52	0.40	62	0.65	78	0.90	94	1.20		
							* 64	0.325	80	0.65	96	1.00		
									* 82	0.40	98	0.80		
											100	0.60		
											*102	0.40		

Note (1) $D \leqq 14.00 : Z_D \geqq 0.10 + b_{1nom}/2$, $D > 14.00 : Z_D \geqq 0.20 + b_{1nom}/2$

(2) The recommended number of terminals in a package length is the maximum number in the package length, except package length D =12.50, 14.00 for the terminal pitch of e =0.40mm. Because they are adjusted with JEDEC. (See "*" in **Table 2**) But, it is different from the number of the maximum terminals which is found by **Note** (1)

8.3 Number of terminal list

Table 3 Number of terminal list (Group2)

e	1.27		1.00		0.80		0.65		0.50		0.40		0.30	
D	n	Z_D	n	Z_D	n	Z_D	n	Z_D	n	Z_D	n	Z_D	n	Z_D
10.79	* 16	0.95	* 20	0.895	22	1.395	28	1.17	34	1.395	44	1.195	54	1.495
					24	0.995	30	0.845	36	1.145	46	0.995	56	1.345
					* 26	0.595	* 32	0.52	38	0.895	48	0.795	58	1.195
									* 40	0.646	50	0.595	60	1.045
											* 52	0.395	62	0.895
													64	0.745
													66	0.595
													68	0.445
													* 70	0.295
12.06	* 18	0.95	22	1.03	* 28	0.83	34	0.83	42	1.03	54	0.83	72	0.78
			* 24	0.53			* 36	0.505	44	0.78	56	0.63	74	0.63
									* 46	0.53	* 58	0.43	76	0.48
													* 78	0.33
13.33	* 20	0.95	* 26	0.665	30	1.065	* 38	0.815	48	0.915	60	0.865	80	0.815
					* 32	0.665			* 50	0.665	62	0.665	82	0.665
											* 64	0.465	84	0.515
													* 86	0.365
14.60	* 22	0.95	* 28	0.80	34	0.90	40	1.125	52	1.05	66	0.90	88	0.85
					* 36	0.50	* 42	0.8	54	0.80	68	0.70	90	0.70
									* 56	0.55	70	0.50	92	0.55
											* 72	0.30	* 94	0.40
15.87	* 24	0.95	* 30	0.935	* 38	0.735	44	1.11	58	0.935	74	0.735	96	0.885
							* 46	0.785	* 60	0.685	76	0.535	98	0.735
											* 78	0.335	100	0.585
													102	0.435
													*104	0.285
17.14	* 26	0.95	32	1.07	40	0.97	48	1.095	62	1.07	80	0.77	106	0.77
			* 34	0.57	* 42	0.57	* 50	0.77	64	0.82	82	0.57	108	0.62
									* 66	0.57	* 84	0.37	110	0.47
													*112	0.32
18.41	* 28	0.95	* 36	0.705	* 44	0.805	52	1.08	68	0.955	86	0.805	114	0.805
							* 54	0.755	* 70	0.705	88	0.605	116	0.655
											* 90	0.405	118	0.505
													*120	0.355
19.68	* 30	0.95	* 38	0.84	46	1.04	56	1.065	72	1.09	92	0.84		
					* 48	0.64	* 58	0.74	74	0.84	94	0.64		
									* 76	0.59	* 96	0.44		
20.95	* 32	0.95	* 40	0.975	* 50	0.875	60	1.05	78	0.975	98	0.875		
							* 62	0.725	* 80	0.725	100	0.675		
											*102	0.475		
22.22	* 34	0.95	42	1.11	52	1.11	64	1.035	82	1.11	104	0.91		
			* 44	0.61	* 54	0.71	* 66	0.71	84	0.86	106	0.71		
									* 86	0.61	*108	0.51		
											110	0.31		
23.49	* 36	0.95	* 46	0.745	56	0.945	68	1.02	88	0.995	112	0.745		
					* 58	0.545	* 70	0.695	* 90	0.745	114	0.545		
											116	0.345		
24.76	* 38	0.95	* 48	0.88	* 60	0.78	72	1.005	92	1.13	118	0.78		
							* 74	0.68	94	0.88	120	0.58		
									* 96	0.63				
26.03	* 40	0.95	50	1.015	62	1.015	76	0.99	98	1.015				
			* 52	0.515	* 64	0.615	* 78	0.665	100	0.765				
									*102	0.515				
27.30	* 42	0.95	* 54	0.65	* 66	0.85	80	0.975	104	0.90				
							* 82	0.65	*106	0.65				
28.57	* 44	0.95	* 56	0.785	68	1.085	84	0.96	108	1.035				
					* 70	0.685	* 86	0.635	*110	0.785				

Note (1) e = 1.00, 0.80, 0.65, 0.50 : $Z_D \geq 0.50$, e =0.40, 0.30 : $Z_D \geq 0.20+b_{1nom}/2$

(2) The recommended number of terminals in a package length is the maximum number in the package length (D). (See "*" in **Table 3**)

8.3 Number of terminal list

Table 4 Number of terminal list (Group3)

e	1.27		1.00		0.80		0.65		0.50		0.40		0.30	
D	n	Z_D	n	Z_D	n	Z_D	n	Z_D	n	z_D	n	Z_D	n	Z_D
13.25	* 20	0.91	* 24	1.125	26	1.825	32	1.75	40	1.875	52	1.625	66	1.825
					28	1.425	34	1.425	42	1.625	54	1.425	68	1.675
					* 30	1.025	36	1.10	44	1.375	56	1.225	70	1.525
							* 38	0.775	46	1.125	58	1.025	72	1.375
									48	0.875	60	0.825	74	1.225
									* 50	0.625	62	0.625	76	1.075
											* 64	0.425	78	0.925
													80	0.775
													82	0.625
													84	0.475
													* 86	0.325
14.50	* 22	0.90	* 26	1.25	32	1.25	40	1.075	52	1.00	66	0.85	88	0.80
					* 34	0.85	* 42	0.75	54	0.75	68	0.65	90	0.65
									* 56	0.50	* 70	0.45	92	0.50
													* 94	0.35
15.75	* 24	0.89	28	1.375	36	1.075	44	1.05	58	0.875	72	0.875	96	0.825
			* 30	0.875	* 38	0.675	* 46	0.725	* 60	0.625	74	0.675	98	0.675
											* 76	0.475	100	0.525
													*102	0.375
17.00	* 26	0.88	* 32	1.00	* 40	0.90	48	1.025	62	1.00	78	0.90	104	0.85
							* 50	0.70	64	0.75	80	0.70	106	0.70
									* 66	0.50	82	0.50	108	0.55
											* 84	0.30	*110	0.40
18.25	* 28	0.87	* 34	1.125	42	1.125	52	1.00	68	0.875	86	0.725	112	0.875
					* 44	0.725	* 54	0.675	* 70	0.625	88	0.525	114	0.725
											* 90	0.325	116	0.575
													118	0.425
													*120	0.275
19.50	* 30	0.86	* 36	1.25	* 46	0.95	56	0.975	72	1.00	92	0.75		
							* 58	0.65	74	0.75	94	0.55		
									* 76	0.50	* 96	0.35		
20.75	* 32	0.85	38	1.375	48	1.175	60	0.95	78	0.875	98	0.775		
			* 40	0.875	* 50	0.775	* 62	0.625	* 80	0.625	100	0.575		
											*102	0.375		
22.00	* 34	0.84	* 42	1.00	* 52	1.00	64	0.925	82	1.00	104	0.80		
							* 66	0.60	84	0.75	106	0.60		
									* 86	0.50	*108	0.40		
23.25	* 36	0.83	* 44	1.125	54	1.225	68	0.90	88	0.875	110	0.825		
					* 56	0.825	* 70	0.575	* 90	0.625	112	0.625		
											*114	0.425		
24.50	* 38	0.82	* 46	1.25	56	1.45	72	0.875	92	1.00	116	0.85		
					58	1.05	* 74	0.55	94	0.75	118	0.65		
					* 60	0.65			* 96	0.50	*120	0.45		
25.75	* 40	0.81	48	1.375	* 62	0.875	76	0.85	98	0.875				
			* 50	0.875			* 78	0.525	*100	0.625				
27.00	* 42	0.80	* 52	1.00	64	1.10	80	0.825	102	1.00				
					* 66	0.70	* 82	0.50	104	0.75				
									*106	0.50				
28.25	* 44	0.79	* 54	1.125	* 68	0.925	* 84	0.80	108	0.875				
									*110	0.625				
29.50	* 46	0.78	* 56	1.25	70	1.15	86	1.10	112	1.00				
					* 72	0.75	* 88	0.775	114	0.75				
									*116	0.50				
30.75	* 48	0.77	58	1.375	72	1.375	90	1.075	118	0.875				
			* 60	0.875	* 74	0.975	* 92	0.75	*120	0.625				

Note(1) e = 1.00, 0.80, 0.65, 0.50 : $Z_D \geq 0.50$, e =0.40, 0.30 : $Z_D \geq 0.20+b_{1nom}/2$

(2) The recommended number of terminals in a package length is the maximum number in the package length (D). (See "*" in **Table 4**)

8.4 Standard Registration

When you need to register a new outline specification on the standard, complete the appendix format 5 in Technical Standardization Committee on Semiconductor Device Package steering rule, in compliance with the Standardization Rule. In order to make a package dimension table, which come sunder Item 2, Appendix format 5, fill the dimensions marked with (✓) in the following Table.

Incidentally, it supposes that it enters package code form type according to **EIAJ ED-7303A** (Name and Code for Integrated Circuits Package).

Table 5

Serial Number				
External Type		P-HOOSOPOOO-OOOO×OOOO-O.OO (P-HOOSOPOOO-OOOO-O.OO)		
Reference Symbol		min	nom	max
Group1	D		✓	
	E		✓	
	A_2	✓	✓	✓
	A			✓
	A_1	✓	✓	✓
	A_3		✓	
	A_4	✓		✓
	b_p	✓		✓
	b_1	✓	✓	✓
	c	✓		✓
	c_1	✓	✓	✓
	θ	✓	✓	✓
	H_E		✓	
	L_p	✓	✓	✓
	e		✓(*)	
	x			✓
	y			✓
	t			✓
	f			✓
	n		✓	
Group2	Z_D		✓	
	L		✓	
	L_1		✓	
	G_{1E}		✓	
	eE		✓	
	D_2		✓	
	D_3			✓
	E_1		✓	
	E_2			✓

*: Means true geometrical position

9. STANDARD PACKAGE LIST

To further clarify the combinations of part dimensions, the combinations of recommended package classifications shall be indicated as shown below as assistance in the design and development of new packages in the future.

9.1 Relation of Package width E , Body height A_2nom

P-HSSOP(terminal pitch e =1.00 -0.30)

Package width E			Body height A_{2nom}								Remark
Group 1	Group 2	Group 3	2.70	1.70	1.50	1.40	1.20	1.00	0.80	0.60	
3.00											L/L1= 0.30/0.50
4.40				*HSSOP			*HSSOP	*HTSSOP	*HVSSOP	*HWSSOP	
5.60											
6.10											
	7.62					*HLSSOP		TSOP2	VSOP2		L/L1= 0.50/1.00
(8.00)				*HSSOP			*HSSOP	*HTSSOP	*HVSSOP	*HWSSOP	
	8.89					*HLSSOP		TSOP2	VSOP2		L/L1= 0.50/1.00
(9.90)				*HSSOP			*HSSOP	*HTSSOP	*HVSSOP	*HWSSOP	
	10.16							TSOP2	VSOP2		L/L1= 0.50/1.00
		11.50	**HSSOP			*HLSSOP		TSOP2 L/L1= 0.50/1.00	VSOP2 L/L1= 0.50/1.00		
		13.00									
		14.50									
		16.00									

*:L/L1=0.50/1.00
**:L/L1=0.80/1.60

	Seated height Amax	Remark
HLSSOP	1.70	
HTSSOP	1.20	(TSOP2)
HVSSOP	1.00	(VSOP2)
HWSSOP	0.80	(WSOP2)

P-HSOP(terminal pitch e=1.27)

Nominal dimensions		Package width	Body height A_{2nom}					Remark
e_E		E max	2.70	1.70	1.50	1.40	1.20	
225mil	5.72	4.72	HSOP					L/L1=0.50/1.00
300mil	7.62	6.62						L/L1=0.80/1.60
375mil	9.53	8.13						
450mil	11.43	10.03						
525mil	13.24	11.94						
600mil	15.24	13.84						

9.2 Relation of HSOP and HSSOP Group1, 2, 3 with Package length (D), Package width (E)

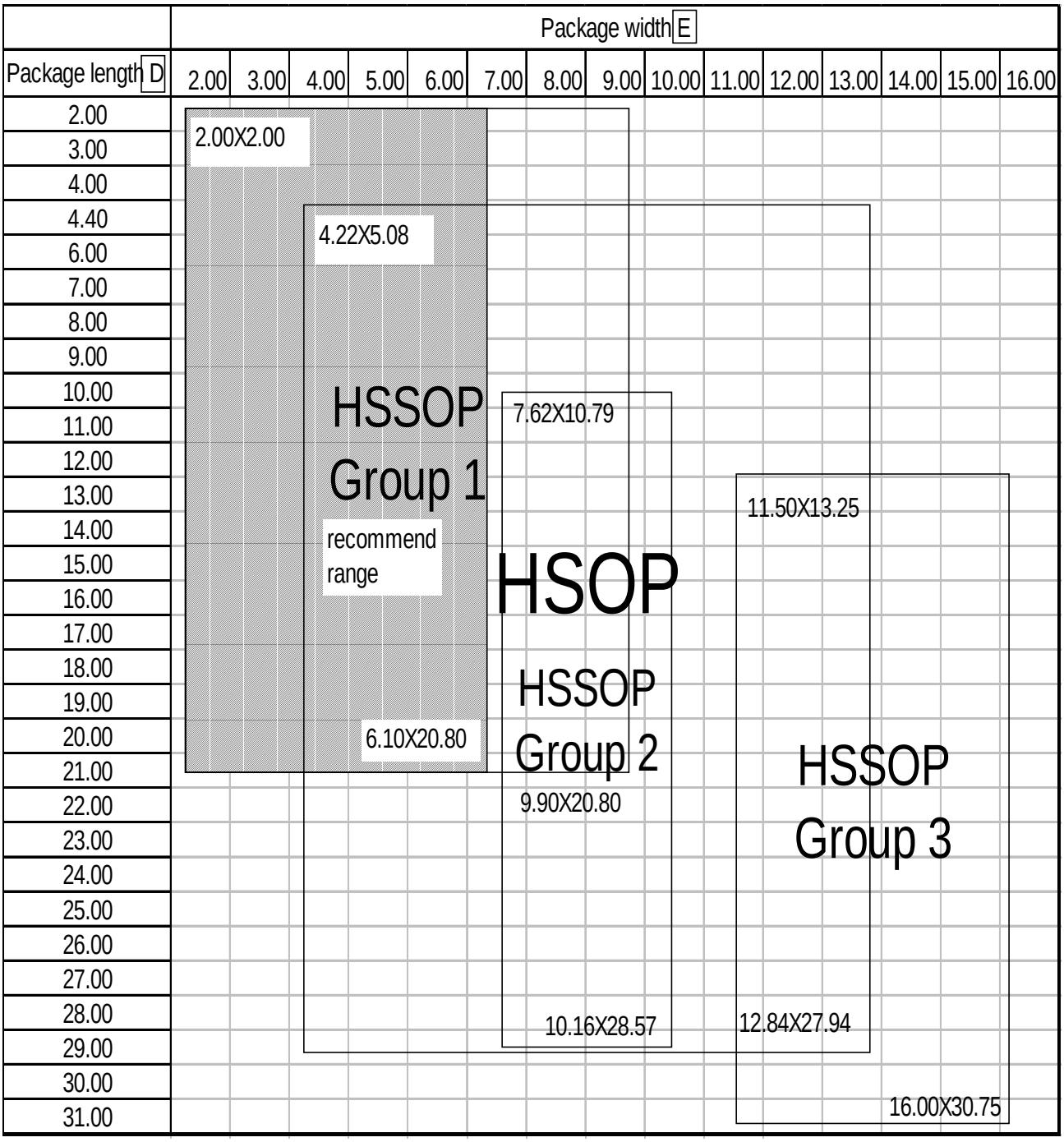

Explanatory notes

1. PURPOSE

This technical report is intended to provide the industrial standards for Plastic Small Outline Package with Heat Sink (hereinafter referred to as P-HSOP) and the design guidelines in producing the P-HSOP and developing the automatic mounting machines and related parts.

2. PROGRESSES OF DELIBERATION

EIAJ ED-7415 which was old standard of P-HSOP formulate form general rule of the power device as 1988 term, one of the business plans of Technical Committee on Semiconductor Package Outline (the forerunner of Technical Standardization Committee on Semiconductor Device Package) in March, 1988 was adopted. Survey of the Packages in question possessed by the various companies concerned was started in April 1988, the package classification list was proposed in November 1988, and after relevant deliberation it was decided to formulate the general rules covering surface mounting package that are regarded as the most trendy ones out of the package with heat sink. The basic line of reasoning for formation of the general rules was proposed in January 1989. The draft of the general rules was proposed in March 1989. Successive deliberation was held after that, the final deliberation was concluded in November 1989, and **EIAJ ED-7415** were established and issued.

On the occasion of revision **EIAJ ED-7415** in pieces of 10, it made **EIAJ EDR-7426** by the contents, which covered the range of **EIAJ EDR-7314** [Design guideline of integrated circuits for P-SSOP (hereinafter referred to as P-SSOP design guideline)], which was established in August, 1996. **EIAJ EDR-7426** was deliberated and was established in December 1999.

This technical report, **EIAJ EDR-7326A** is revised ,the revision which is in the package outline drawing form to have conformed to the IEC standard after considering a consistence with **EIAJ ED-7314A** (Design guideline of integrated circuits for P-SSOP) which was established in January 2002 in IC Package Sub Committee.

Furthermore, it added new Seated height cord [V] (HVSSOP (Very thin SSOP with Heat Sink):Seated height A_{max}=1.00mm), and [W] (HWSSOP (Very Very thin SSOP with Heat Sink):Seated height A_{max}=0.80mm). Also, it added an equal to or less than 3.00 mm area, package width($\boxed{E}$), the package length ($\boxed{D}$) which to think that is increased in by the production in the future. This technical report, **EIAJ EDR-7326A** is established in March 2002 in IC Package Sub Committee.

3. BASIC IDEA

(1) Datum

The datum and geometrical tolerances were adopted this technical report. In adopting the datum, we referred to the JEDEC standards for various packages, and registered packages. For the datum in package length, a point 0.10 mm inside the terminal nose at the package center was set as datum target, sharing a tolerance for the terminal center position (X).

(2) Terminal pith (e)

EIAJ EDR-7426A (Design guideline of integrated circuits for P-HSOP) is defined to have seven dimension ; 1.27, 1.00, 0.80, 0.65, 0.50, 0.40, 0.30 mm. **EIAJ EDR-7426A** (Design guideline of integrated circuits for P-HSOP) covered **EIAJ EDR-7314A** (Design guideline of integrated circuits for P-SSOP) terminal pith range.

(3) Terminal thickness (c_1)

EIAJ EDR-7426A (Design guideline of integrated circuits for P-HSOP) covered **EDR-7314A** (Design guideline of integrated circuits for P-SSOP) terminal thickness (c_1) range.

It is defined to have 6 kind of practical dimension ; c_{1nom}=0.125, 0.15, 0.20, 0.25, 0.30, 0.40

(4) Outer coating of the terminals

The terminal width and thickness, limited to solder plating. This technical report provides them for extremely thin plating such as palladium.

(5) Package outline drawing and Pattern of terminal areas

According to the IEC standard, As the rule with the terminal width (b_p) of Package outline drawing, it added to tolerance for terminal center position (X) and it gained means projected tolerance zone (P). It's meaning shows the range of the measurement object and guaranteeing the height of A_3 =0.25. Also, it changes the symbol of Pattern of terminal areas into Terminal interval pitch(eE) from Overall width(H_E) and relation is eE = H_E – L_{pnom}.

4. PACKAGE NAMES

According to the package height code which was established in the **EIAJ ED-7303A** and IEC format, thin body type SSOP made the name which is with low seated height, It inewly added HVSSOP(Very thin SSOP with Heat sink), HWSSOP(Very Very thin SSOP with Heat sink)in addition to HLSSOP(Low profile SSOP with Heat sink) ,HTSSOP(Thin SSOP with Heat sink)from this design guide. Seated height (A) and (A_{2nom}) are shown below.

HLSSOP (Low profile SSOP with Heat sink): seated height A_{max}=1.70mm, A_{min} > 1.20mm,
body height A_{2nom}=1.40mm

HTSSOP (Thin SSOP with Heat sink) :seated height A_{max}=1.20mm, A_{min} > 1.00mm,
body height A_{2nom}=1.00mm

HVSSOP (Very thin SSOP with Heat sink) :seated height A_{max}=1.00mm, A_{min} > 0.80mm,
body height A_{2nom}=0.80mm

HWSSOP (Very Very thin SSOP with Heat sink):seated height A_{max}=0.80mm, A_{min} > 0.65mm,
body height A_{2nom}=0.60mm

5. COMMITTEE MEMBERS

The IC Package Subcommittee of Technical Standardization Committee on Semiconductor Device Package has mainly deliberated this standard.

The subcommittee members are shown below.

<Technical Standardization Committee on Semiconductor Device Package>

Chairman	ELPIDA MEMORY,INC.	Ichiro Anjo

< IC Package Subcommittee>

Chief	SANYO ELECTRIC CORP.	Hideyuki Iwamura
Co- chief	SHARP CORP.	Katuyuki Tarui
	FUJITSU LTD.	Hiroshi Inoue
	TOSHIBA CORP.	Yasuhiro Koshio
	MATSUSHITA ELECTRIC INDUSTRIAL CO.,LTD.	Toshiyuki Fukuda
Members	AMKOR THECHNOROGY JAPAN. INC	Naomitchi Syoji
	ENPLAS CORP.	Yoshiyuki Ohashi,
	ENPLAS CORP.	Hisao Oshima
	ELPIDA MEMORY, INC.	Fumitake Okutsu
	OKI ELECTRONICS INDUSTRY CO.,LTD.	Kazuhiko Sera
	KYOCERA CORP.	Akihiro Funahashi
	KOGUNEX	Takahiro Aoki
	SANYO ELECTRIC CORP.	Kiyoshi Mita
	SUMITOMO 3M CORP.	Akiko Tsubota
	SEIKO EPSON CORP.	Yoshiaki Emoto
	SONY CORP.	Hiroshi Abe
	TOSHIBA CORP.	Morihiko Ikemizu
	NEC CORP.	Kenichi Kurihara
	NEC CORP.	Kaoru Sonobe
	IBM JAPAN CORP.	Tuneo Kobayashi
	TEXAS INSTRUMENTS JAPAN LTD.	Takayuki Ohuchida
	NGK CORP.	Katsuaki Sugino
	HITACHI LTD.	Yoshinori Miyaki
	HITACHI Cable LTD.	Tadashi Kawanobe
	FUJITSU LTD.	Kaoru Tachibana
	FUJI ELECTRIC CO.,LTD.	Osamu Hirohashi

	MATSUSHITA ELECTRIC INDUSTRIAL CO.,LTD.	Tomoki Tamaki
	MITSUBISHI ELECTRIC CORP.	Kazuya Fukuhara
	MELCO INC.	Tsuneo Watanabe
	YAMAICHI ELECTRIC CO.,LTD.	Noriyuki Matsuoka
	UNITECHNO INC.	Hitoshi Matsunaga
	ROHM CO.,LTD.	Osamu Miyata
Special Members	SHIN-ETSU POLYMER	Ken Tamura
	TOYO JUSHI CO.,LTD.	Hitoshi Kazama